GAMME SENIOR

SENIOR COMBI

Ref : MF003

DESCRIPTION

- Powerful, sturdy.
- Detachable tool for easy cleaning and maintenance.
- Very handy.
- Safety button.
- Variable speed as standard.
- Stainless steel mixer tube, whisks and guard for easy cleaning and perfect hygiene.
- Titanium-plated blade easily dismantled without any special tool.
- Double insulation.

USE

Mixer : It allows to mix, directly in the pots, many applications including : fish soups, panades (thick soup reduced to puree), salad dressings, pancakes paste, gravies, sauces, mayonnaise, puree of vegetables lightly pulverized, porridge, raw carrots puree, fruits cream …

Whisks : To prepare batters, creams and mousselines easily.

Capacity : 20 to 40 Liters (mixer) / 5 to 20 Liters (whisks)

MAINTENANCE

Clean the outside of the tube and the blade protector by passing it under the faucet.

Wash the motor block with a sponge or with a slightly damp cloth.

Never clean this machine with water jet spray or in the dishwasher.

Use the support to store your device.

TECHNICAL DATA	
OUTPUT MAX	350 W
SPEED MIXER	2800 to 9000 R.P.M.
SPEED WHISKS	300 to 900 R.P.M.
VOLTAGE	110 - 120 V or 220 - 240 V
TOTAL LENGTH	640 mm
SHAFT LENGTH	300 mm
WHISKS LENGTH	205 mm
DIAMETER	97 mm
ACTUAL WEIGHT	2,5 kg

www.dynamicmixers.com

Dynamic - 518 rue Léo Baekeland BP57 - 85290 Mortagne sur Sèvre
Tél : +33 (0)2 51 63 02 72 • **E-mail :** contact@dynamicmixers.com
Follow us on social networks !

Made in France
Fabriqué en France

ACCESSORIES

STANDARD MOTOR BLOCK

Ref. : **AC005**

CAPACITY	20 to 40 Liters
SHAFT LENGTH AC006	300 mm
SHAFT LENGTH AC016	400 mm
SPEED R.P.M.	2 800 / 9 500

Mixer tools

M300
Ref. : **AC006**

M400
Ref. : **AC016**

CAPACITY	5 to 20 Liters
WHISKS LENGTH	205 mm
SPEED R.P.M.	300 / 900

Extractable whisks

Ref. : **AC007**

CAPACITY	10 to 15 kg
SHAFT LENGTH	420 mm
SPEED R.P.M.	100 / 600

Ricer tool

Ref. : **AC004**

CAPACITY	5 Liters
HEIGHT	600 mm
SPEED R.P.M.	400 / 1 500

Cutter bowl with a selection of knives (standard or serrated)

Ref. : **AC055**

www.dynamicmixers.com

Dynamic - 518 rue Léo Baekeland BP57 - 85290 Mortagne sur Sèvre
Tél : +33 (0)2 51 63 02 72 • **E-mail :** contact@dynamicmixers.com
Follow us on social networks !

Made in France
Fabriqué en France

TECHNICAL SHEET

Parts list	Code
Carbon brushes (2) (230V)	0514
Carbon brushes (2) (115V) (from N°130425)	0523
Ball bearing	0601
Squeezing washer	0726
Wall bracket	0880
Non-locking switch	0908
Capacitor	0972.1
Strain relief 230 V	0950
Strain relief 115V	0950.1
Warning label	1083
Dynamic label	1027
Label w/ serial number 230 V	1071
Label w/ serial number 115 V	1072
Variable speed control board 230 V	1213
Variable speed control board 115 V	1214
Variable speed control knob	4014
Brace screws (4)	7903
Braces (4)	7913.F
Power cord 230 V	9011
Stator screws (2)	9023
Self-lubricating ring	9025
Coupler for armature	9028
Power cord 115 V	9040
Power cord (UK)	9067
Handle screws (3)	9502
Switch protector	9813
Upper motor casing (230V)	9817
Upper motor casing (115V) (from N°130425)	9817.1
Fan	9818
Rotor w/ o coupling 230 V	9819
Rotor w/o coupling 115 V	9819.1
Stator 230 V w/ carter, carbon brushes holders	9820
Stator 115 V w/ carter, carbon brushes holders	9820.1
Upper half handle	9832
Complete handle 230 V	9840
Complete handle 115 V	9840.1
Lower half handle w/ label 230 V	9841
Lower half handle w/ label 115 V	9841.1
Aluminium carter + ball bearing	9842

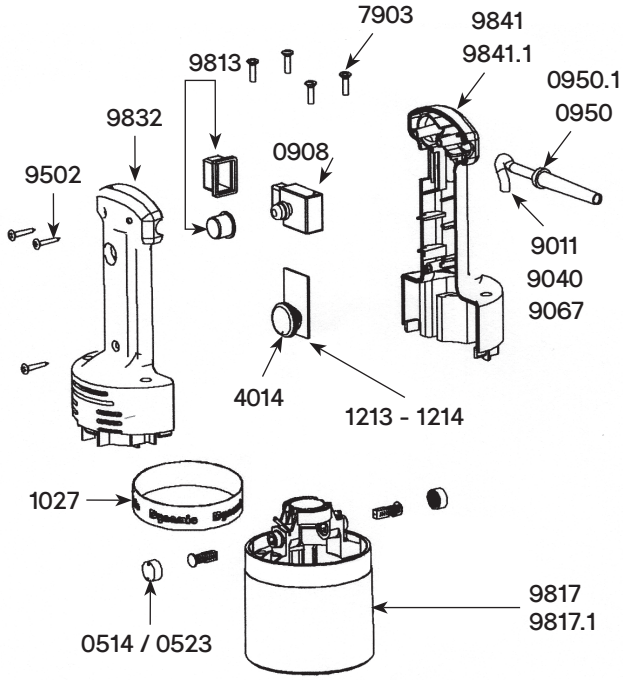

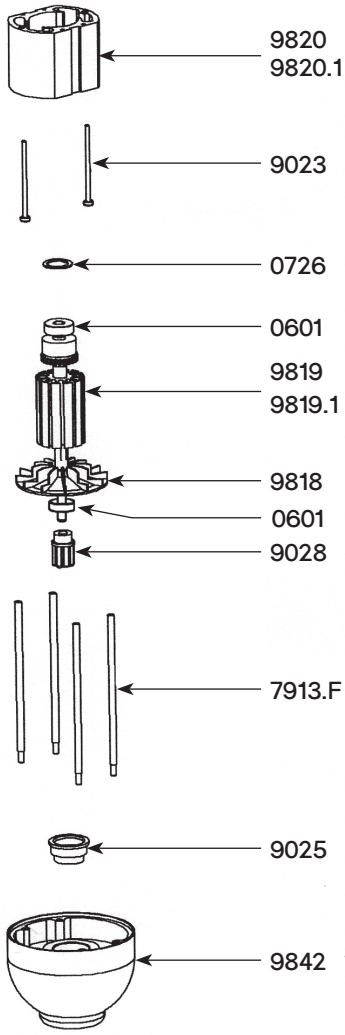

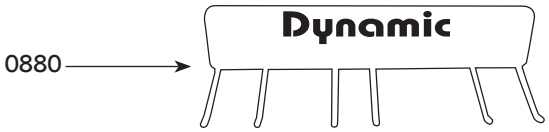

TECHNICAL SHEET

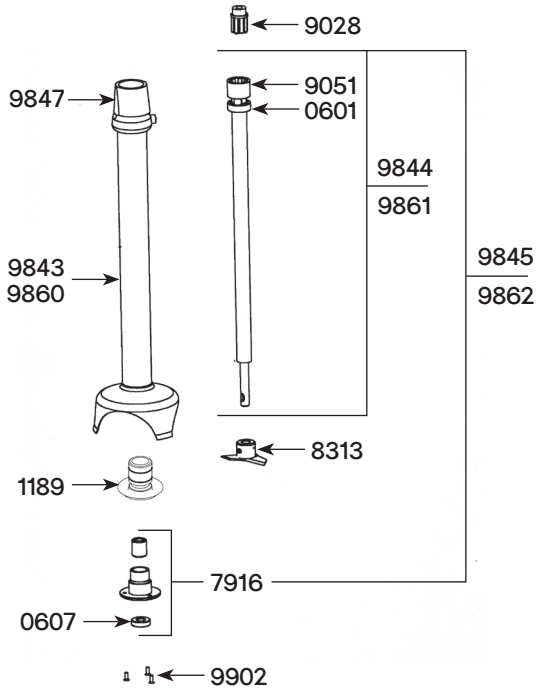

M300 SENIOR - Ref AC006
(Complete attachment)

Parts list	Code
Ball bearing	0601
Waterproof seal	0607
Bearing holder + seal	1189
Lower ball bearing assembly (w/ o screws)	7916
Cutter blade (w/ screw)	8313
Coupler for armature	9028
Coupling casing + pins	9051
Tube assembly + bearing	9843
Shaft & coupling sleeve	9844
Shaft, lower bearing & cutter assembly	9845
Black tip	9847
Lower bearing screws - Stainless steel (3)	9902

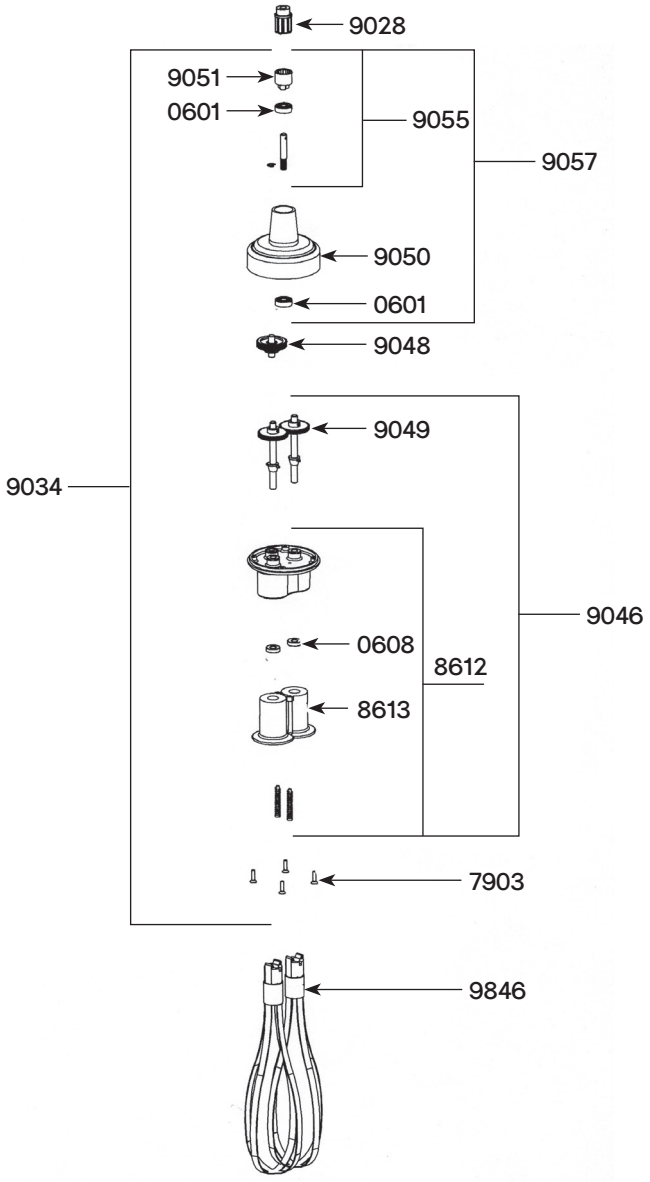

Senior whisk - Ref AC007

Parts list	Code
Ball bearing	0601
Waterproof seal for whisk	0608
Pin 3 X 20	0744
Pin 3 X 14	0745
Brace screws (4)	7903
Holder + plastic ejector + seal	8612
Plastic ejectors (pair)	8613
Coupler for armature	9028
Reduction gear assembly	9034
Lower casing w/ o middle gear	9046
Central double gear & shaft	9048
Single gear (2) + pin	9049
Upper plastic casing	9050
Coupling casing + pin	9051
Equipped upper shaft	9055
Complete upper casing	9057
Whisks (2)	9846