Dynamic®

SMX SERIES

SMX 700 TURBO

Ref : MX040T

DESCRIPTION

- Special huge volumes, collective kitchens and intensive use.
- Ensured longer life with its new cooling technology.
- Detachable mixer tool that can be easily dismantled.
- All stainless steel mixer tool and bell for a perfect hygiene.
- Double insulation.
- Titanium-plated blade easy to remove.
- Easy manipulation into the plots thanks to its specific support brackets.

ACCESSORIES

Included : Mixer hook support.

Supports brackets for your safety and your comfort.

USE

It allows you to mix directly in the pots, in few minutes, 75 to 300 liters of cooked vegetables.

Excellent for huge quantity of soups, panades, brunoises, crepes batter, sauces, gravy, mayonnaises and many other products.

Capacity : 75 to 300 L.

MAINTENANCE

Wash the tool and the bell under the faucet, if necessary with washingup liquid.

Never clean this machine with water jet spray or in the dishwasher.

Wash the handle with a sponge or with a slightly damp cloth.

TECHNICAL DATA	
OUTPUT MAX	925 W
SPEED	11 000 R.P.M.
VOLTAGE	110-120 V or 220-240 V
TOTAL LENGTH	870 mm
SHAFT LENGTH	600 mm
DIAMETER	125 mm
ACTUAL WEIGHT	6,5 kg

www.dynamicmixers.com

Dynamic - 518 rue Léo Baekeland BP57 - 85290 Mortagne sur Sèvre
Tel : +33 (0)2 51 63 02 72 • **E-mail :** export@dynamicmixers.com
Follow us on social networks!

Made in France
Fabriqué en France

TECHNICAL SHEET

Parts list	Code
Carbon brushes (pair)	0529H
Ball bearing	0601i
Equipped output axle	0807H
Motor & shaft drive sprocket	9028
Ball bearing ring	119950
Ball bearing ring	119964
Output shaft	45121H
Coupling sleeves	45122
Motor & shaft drive sprocket	45123
Plastic fan housing	45125H
Braces (4)	45138H
Brace screws (4)	45139
Motor 220-240 V	45201H
Motor 110-120 V	45201H.1
Top housing	45503
Handle cap (2)	45610H
Plastic Fan	45633 DSC
Sleeve & complete handle & label & cap	45709H
Complete control casing 230V	45712
Complete control casing 115V	45712.1
Lower housing	45831H

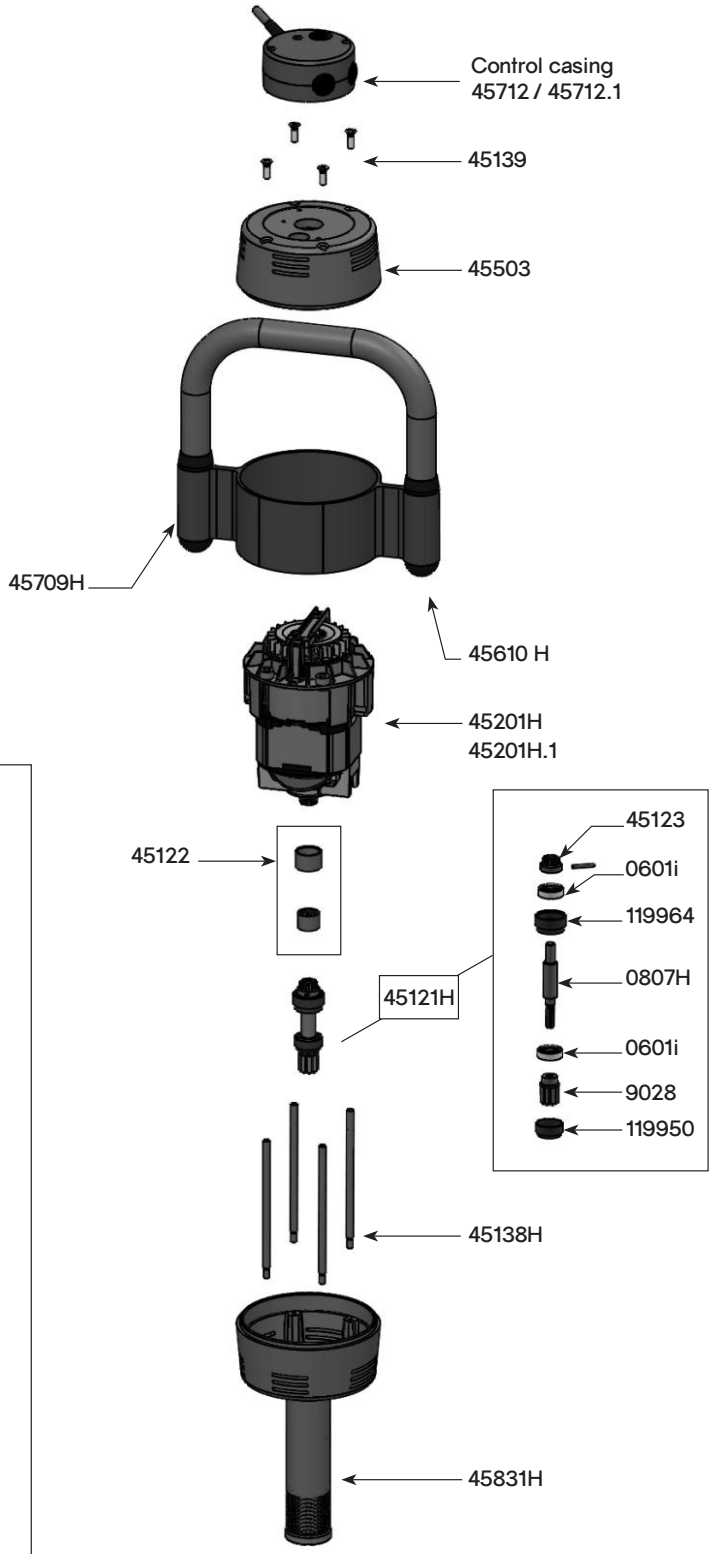

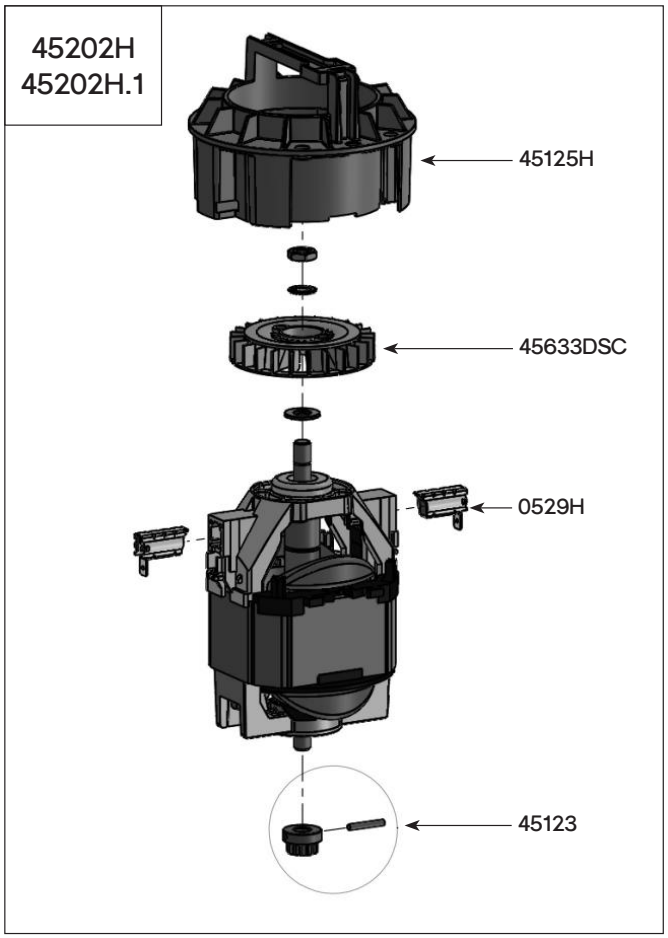

TECHNICAL SHEET

SMX 700 TURBO Attachment - Ref AC075T
(Complete Attachment)

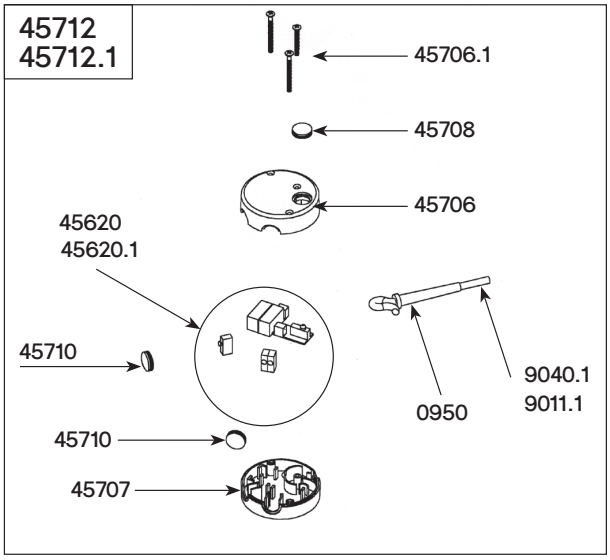

Parts list	Code
Ball bearing	0601i
Self-lubricating ring	0603
Waterproof seal	0607
O. ring	0610PD
Toric seal	0641
Ball bearing ring	7912
Wall bracket	0862
Strain relief 230 V	0950
Power cord 230 V	9011.1
Motor & shaft drive sprocket	9028
Power cord 115 V	9040.1
Coupling casing + pin	9051H
Removable complete bell	45130H
Cutter blade w/ screw	45161
Shaft & bearing	45328
Food assembly	45329
Circuit board 230 V	45620
Circuit board 115 V	45620.1
Top housing (orange plastic piece)	45706
Screws control case set	45706.1
Lower housing (orange plastic piece)	45707
Handle cap protector (unit)	45708
Handle cap protector (unit)	45710

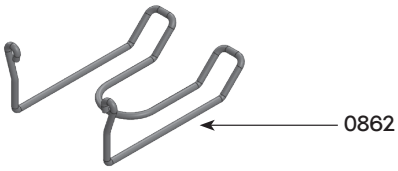

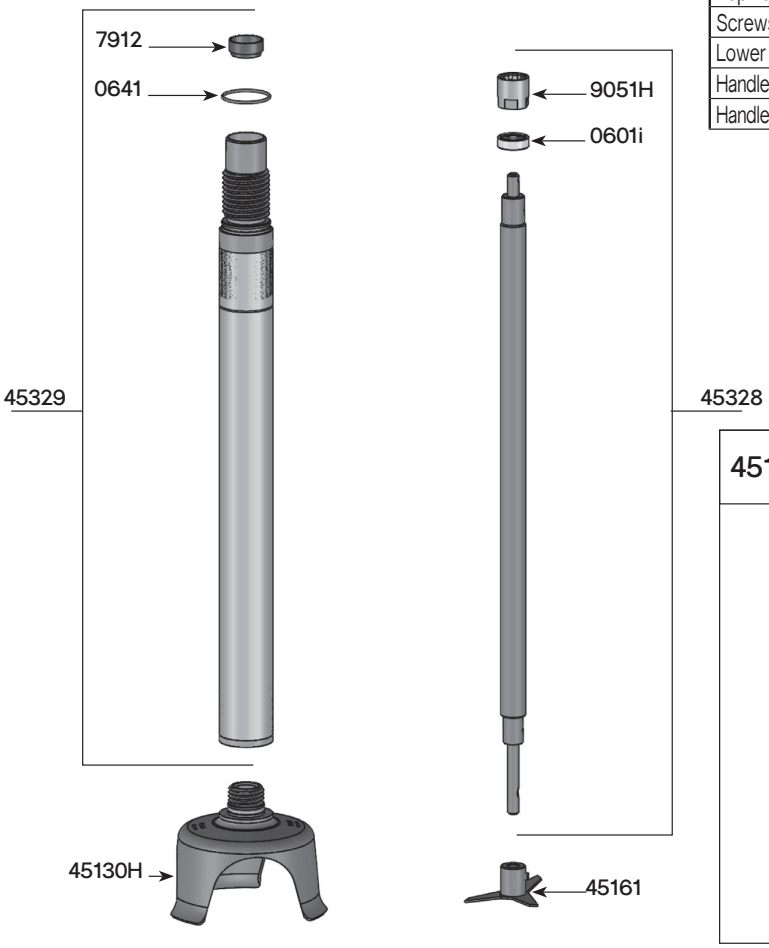

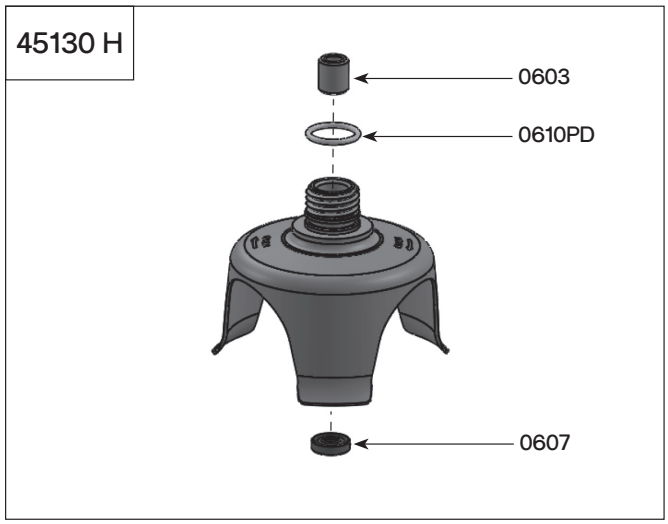

SM 4/6/8/10/12 MIXER SUPPORTS
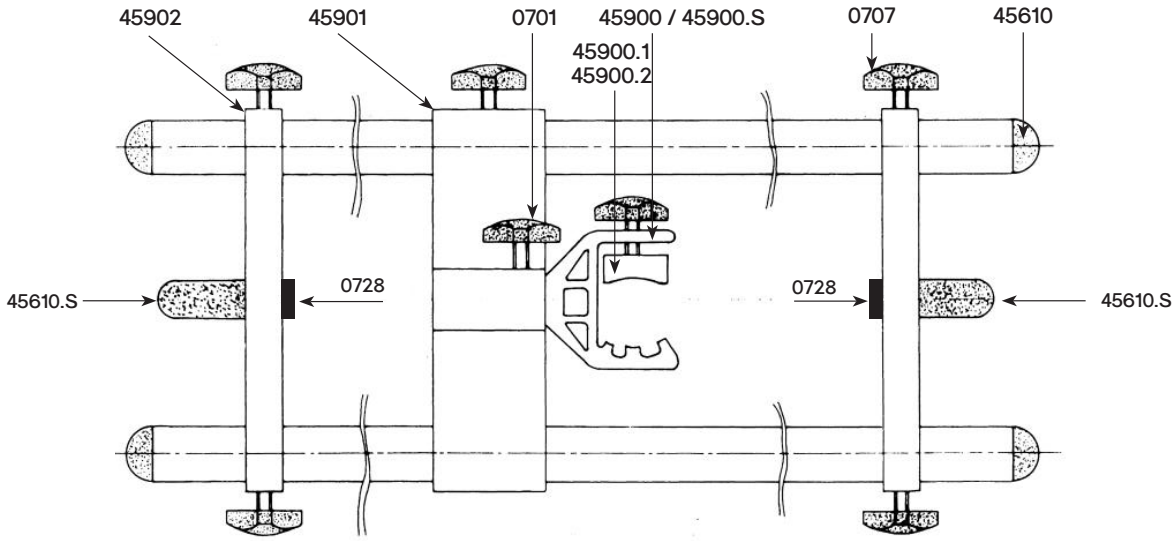
Parts list	Code
Tightening knob	0701
Tightening knob	0707
White knob (x2)	0728
Plastic caps	45610
Plastic holder for tube	45900
SENIOR plastic holder for tube	45900.S
Orange half moon + screws + washer	45900.1
SENIOR orange half moon + screws + washer + block	45900.2
60 mm width bracket	45901
20 mm width bracket	45902
Exterior stop (x2)	45610.S