SPECIAL BRATT PANS SERIES

SMX 300 CC BLENDER

Ref : MX155T

DESCRIPTION

- Time saving, up to 3 times faster than with a standard blade.
- Special low height container with large capacity.
- Ensured longer life with its new cooling system.
- Fully removable foot for perfect hygiene.
- Stainless steel triangular hammer, titanium plated.
- Stainless steel tube and bell.
- No blade, no risk of cutting.
- Weight adapted for working confort.
- Complies with HACCP recommendations.

USE

Especially designed for mixing in low height container with large capacity (bratt pans).

The SMX 300 CC is a powerful and handy mixer which pulverizes 75 to 300 liters of cooked vegetables in a few minutes.

Indispensable for big quantities of soups, veloutés, sauces, chopped vegetables ...

Its constant speed allows to produce fine and delicate mixtures.

Capacity : 75 to 300 Litres

TECHNICAL DATA	
OUTPUT MAX	1000 W
SPEED	11 000 R.P.M
VOLTAGE	110-120 V or 220-240 V
TOTAL LENGTH	609 mm
SHAFT LENGTH	300 mm
DIAMETER	125 mm
ACTUAL WEIGHT	6,1 kg

MAINTENANCE

Rinse the bottom of the foot under water. Beware of splashing that could penetrate through the engine's ventilation slots and damage it.

For more efficient cleaning, immerse the mixer foot into a pot containing clear water and switch the appliance on for a few seconds.

Do not put into the dishwasher or use water jet.

Clean the motor unit with a slightly damp sponge or cloth.

www.dynamicmixers.com

Dynamic - 518 rue Léo Baekeland BP57 - 85290 Mortagne sur Sèvre

Tel : +33 (0)2 51 63 02 72 • **E-mail :** export@dynamicmixers.com

Follow us on social networks!

Made in France
Fabriqué en France

TECHNICAL SHEET

Parts list	Code
Carbon brushes (pair)	0529H
Ball bearing	0601i
Equipped output axle	0807H
Output shaft	45121H
Coupling sleeves	45122
Motor & shaft drive sprocket	45123
Fan housing Plastic	45125H
Braces (4)	45138H
Brace screws (4)	45139
Motor 220-240 V	45202H
Motor 110-120 V	45202H.1
Top housing	45503
Handle cap (2)	45610H
Plastic Fan	45633DSC
Sleeve & complete handle & label & cap	45709H
Complete control casing 230V	45712
Complete control casing 115V	45712.1
Lower housing	45831H
Ball bearing ring	119950
Ball bearing ring	119964

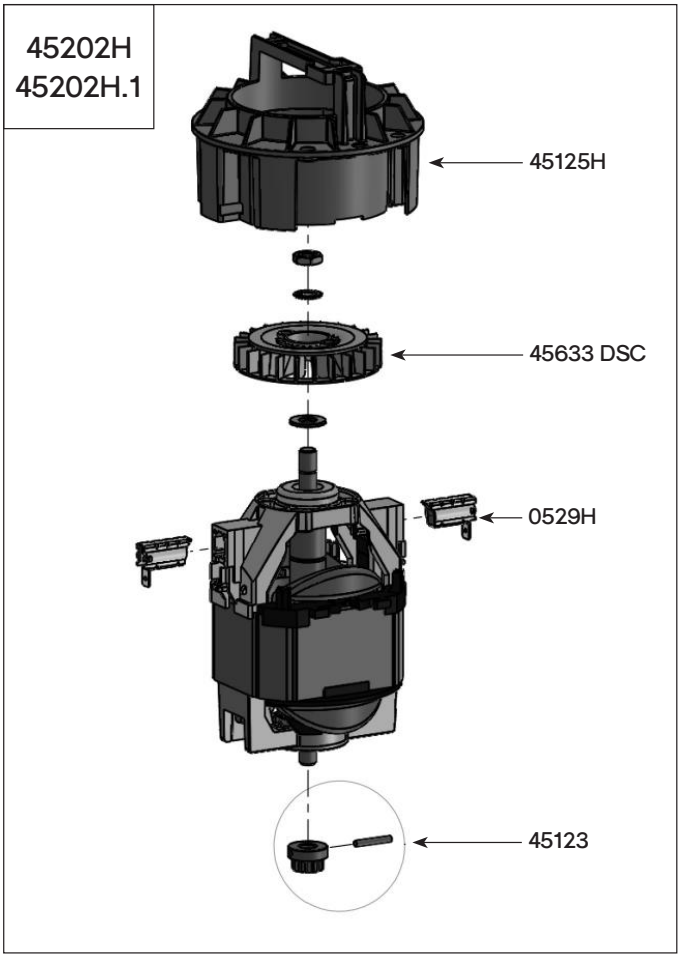

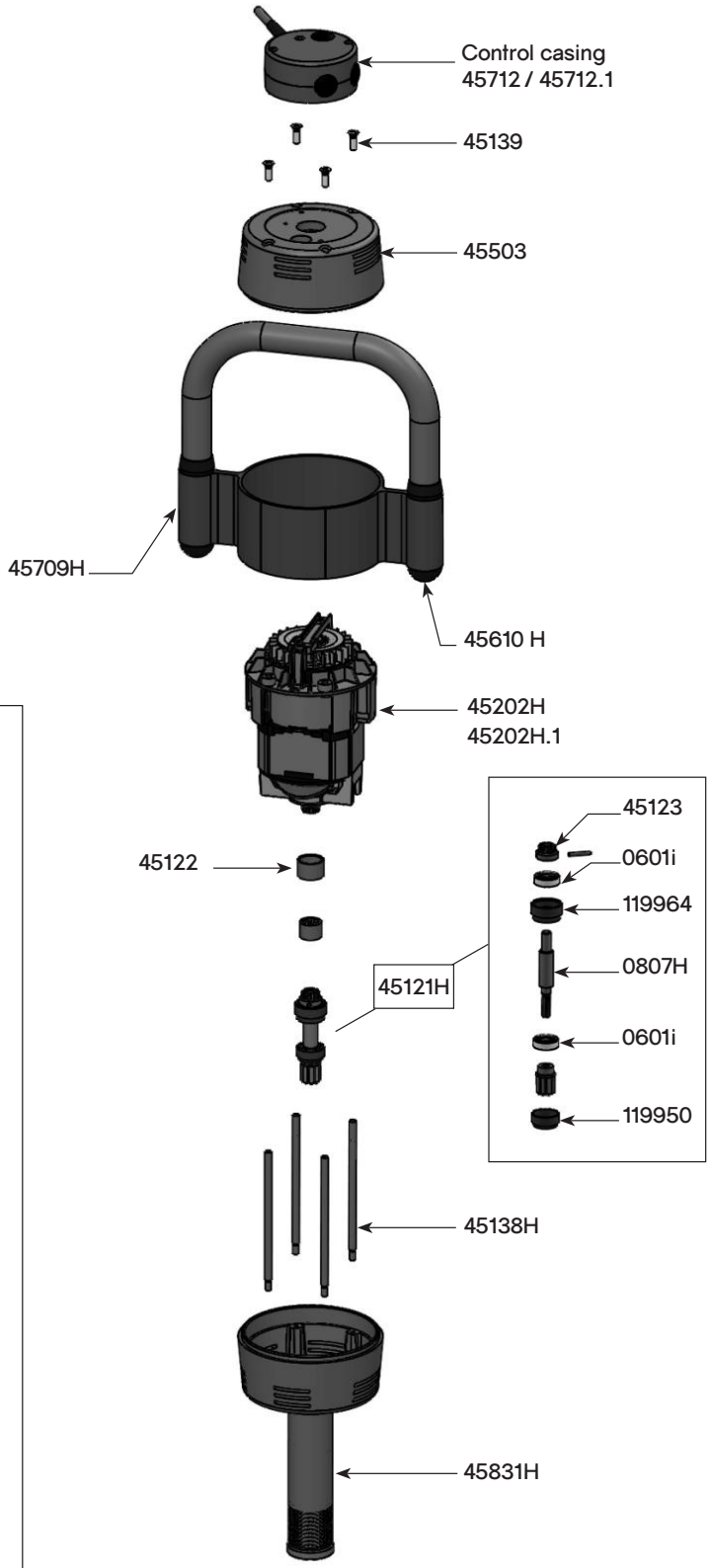

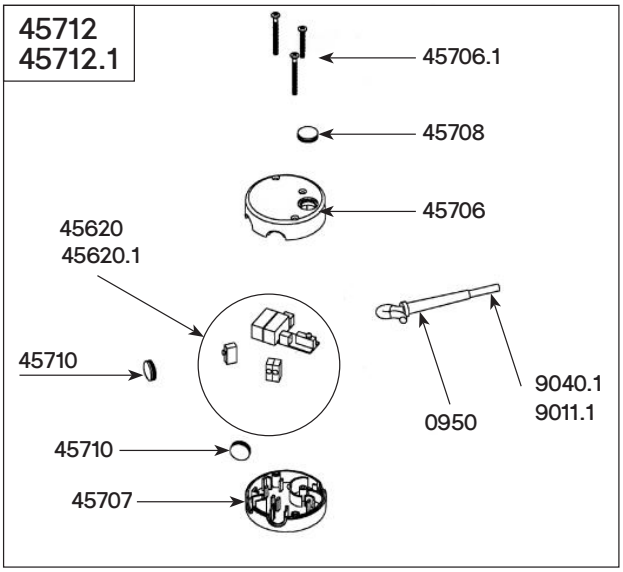

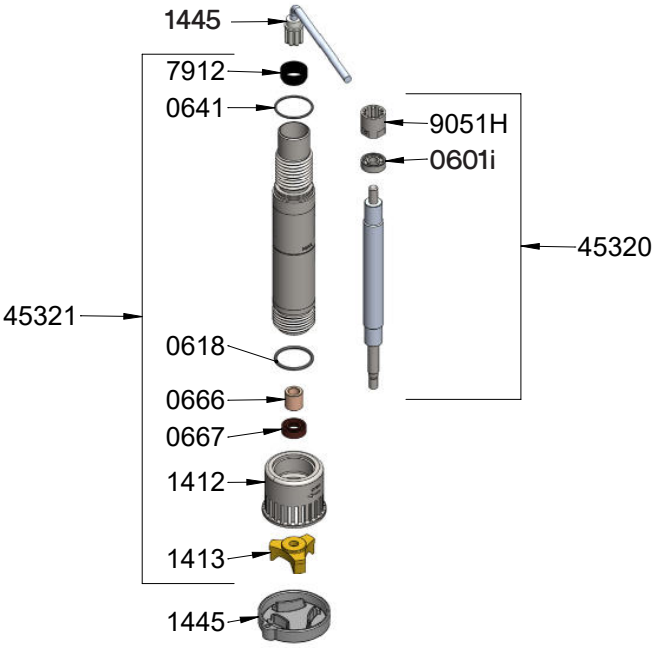

CC SMX TURBO BLENDER Attachment - Ref AC255T
(Complete Attachment)

Parts list	Code
Ball bearing	0601i
O. ring	0618
Toric seal	0641
Self-lubricating ring	0666
Waterproof seal	0667
Strain relief 230 V	0950
BLENDER SMX Bell	1412
BLENDER SMX Cutter	1413
Dismounting tool	1445
Ball bearing ring	7912
Power cord 230 V	9011.1
Motor & shaft drive sprocket	9028
Power cord 115 V	9040.1
Coupling casing + pin	9051H
Shaft & bearing	45320
Food assembly	45321
Circuit board 230 V	45620
Circuit board 115 V	45620.1
Top housing (orange plastic piece)	45706
Screws control case set	45706.1
Lower housing (orange plastic piece)	45707
Handle cap protector (unit)	45708
Handle cap protector (1)	45710