DYNAMIX SERIES

NOMAD® 190

Ref : MX140

DISKS BLADES

DESCRIPTION

- Cordless mixer, delivered with charger and Lithium-ion battery.
- Lightness, quick, efficient and robust.
- Easily detachable, easy cleaning and maintenance.
- Stainless steel foot, bell and titanium-plated blade for a perfect hygiene.
- Titanium-plated blade easy to remove.
- Ergonomic.
- Quiet.
- Versability with all the additional accessories (standard or emulsifying knives, beater or emulsifying disks, removable whisks, ricer tool, cutter bowl, 1- to-3 liters bowl).

ACCESSORIES

USE

Mixer : It allows to crush and mix, in small quantities, directly in pots excellent soups and realize sauces and gravy, mayonnaises, brunoises, crêpes batter, porridge, fruits cream, etc.

Whisks : To prepare easily batter, creams and mousselines.

Ricer tool : Perfect to realize purees or smooth vegetable creams, compotes, etc.

Cutter : It allows to crush, mix, chop vegetables, garlic, onions, herbs, parsley, nuts, almonds, meats, Parmesan, etc.

Capacity : 1 to 8 Liters

MAINTENANCE

Detachable accessories for easy cleaning. Clean the accessories by passing them under the faucet.

Wash the motor block with a sponge or with a slightly damp cloth.

Never clean this machine with water jet spray or in the dishwasher.

Use the Dynamix support (Ref SM030) to store your device.

TECHNICAL DATA	
OUTPUT MAX	2000 mAh - 12 Vdc
SPEED	10000 R.P.M.
VOLTAGE	12 Vdc
TOTAL LENGTH	480 mm
SHAFT LENGTH	190 mm
DIAMETER	110 mm
ACTUAL WEIGHT	1,5 kg

www.dynamicmixers.com

Dynamic - 518 rue Léo Baekeland BP57 - 85290 Mortagne sur Sèvre
Tél : +33 (0)2 51 63 02 72 • **E-mail :** contact@dynamicmixers.com
Follow us on social networks !

Made in France
Fabriqué en France

ACCESSORIES

STANDARD MOTOR BLOCK

Ref. : **AC580**

CAPACITY	1 to 8 Liters
SHAFT LENGTH	190 mm
SPEED R.P.M.	10 000

Mixer tools

Emulsifying knife - 4 blades
Ref. : **AC550**

Standard knife - 2 blades
Ref. : **AC551**

Beater disk
Ref. : **AC552**

Emulsifying disk
Ref. : **AC553**

CAPACITY	1 to 4 Liters
WHISKS LENGTH	185 mm
SPEED R.P.M.	600 / 2 500

Extractable whisks

Ref. : **AC516**

CAPACITY	1 to 5 kg
SHAFT LENGTH	126 mm
SPEED R.P.M.	70 / 300

Ricer tool

Ref. : **AC517**

CAPACITY	0,8 Liter
HEIGHT	200 mm
SPEED R.P.M.	600 / 2 500

Cutter bowl

Ref. : **AC518**

www.dynamicmixers.com

Dynamic - 518 rue Léo Baekeland BP57 - 85290 Mortagne sur Sèvre
Tél : +33 (0)2 51 63 02 72 • **E-mail :** contact@dynamicmixers.com
Follow us on social networks !

Made in France
Fabriqué en France

TECHNICAL SHEET

Motor block Dynamix nomad - Ref AC580

Parts list	Code
DC 12V battery	AC585
220-240V charger	AC590
110-120V charger	AC590.1
220-240V charger - UK power cord	AC590UK
Right handle	2843
Left handle	2849
Screws + washer + handle nuts (2)	2850
Screws for motor belt (2)	2855
Battery housing	2900
Terminal support	2901
Motor support	2902
Motor belt	2903
Coupling	2904
Centraliser + screws	2905
Label	2906
Hood	2907
Circuit board	2908
ID label	2909
Screw	2910
12V DC Motor	9408
Handle cap protectors	45710
Handle screws (2)	079958

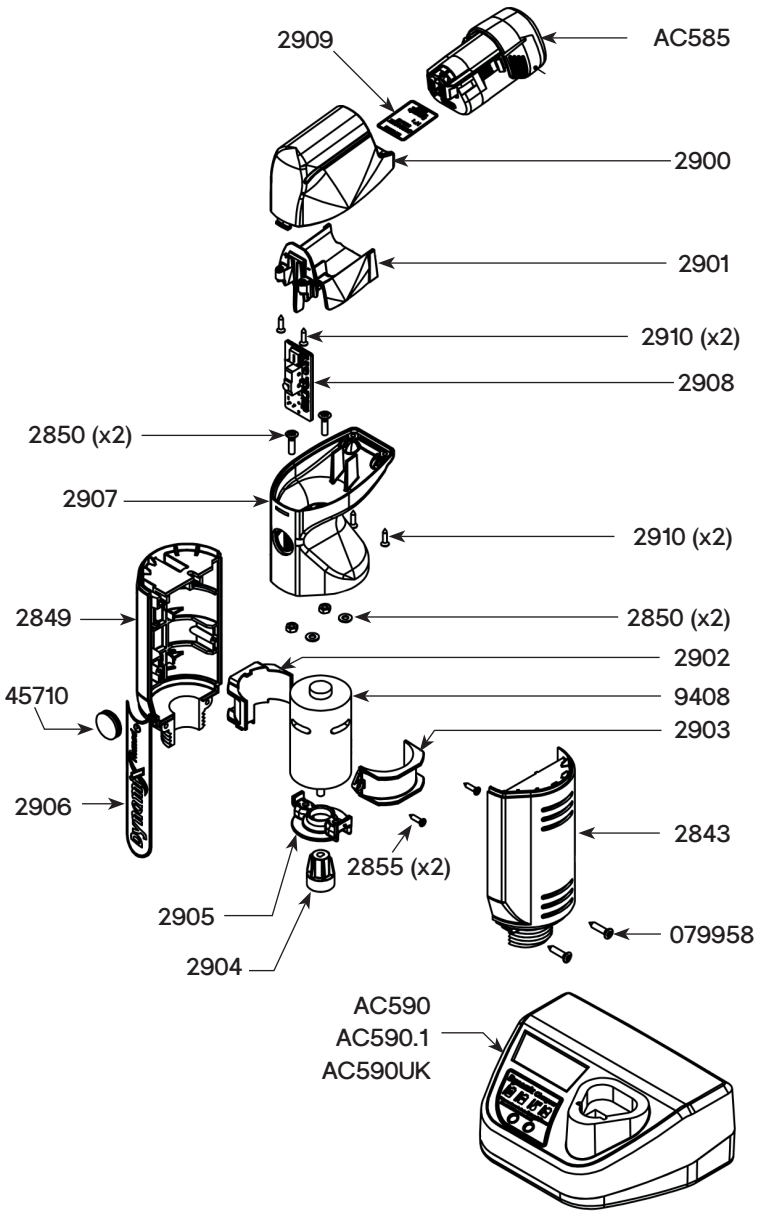

TECHNICAL SHEET

M 160 - Ref AC520
(Complete attachment)

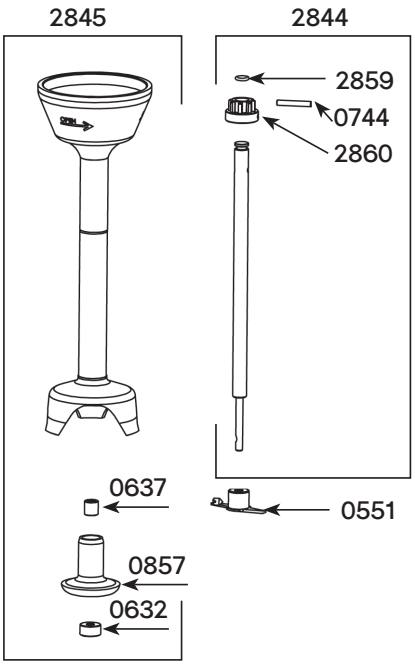

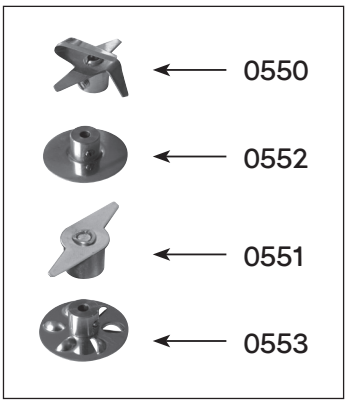

Parts list	Code
Self-lubricating ring	0666D
Waterproof seal	0667D
Emulsifying blade with screws	0550
Standard blade with screws	0551
Batter blade with screws	0552
Smoothie emulsifying blade with screws	0553
Double lip waterproof seal	0632
Self-lubricating ring	0637
Pins 3 x 20	0744
Bearing holder	0857
Brace with rings	1421
BLENDER DYNAMIX bell	1422
BLENDER DYNAMIX crushing knife	1423
Shaft (coupling, pin, O ring)	1424
Dismounting tool	1425
Shaft and bearing	2844
Dynamix foot assembly + ring + seal	2845
Extended Dynamix foot assembly + ring + seal	2845.XL
Dynashake foot assembly + ring + seal	2856
Shaft and bearing	2857
Driving shaft joint	2859
Coupling hub	2860

TECHNICAL SHEET

Parts list	Code
O. ring	0650
Potato blade	08995.V
Potato grid	089940
Ricer inferior carter	1179
Secured washer	1181
Grid holder	1195.V
Compression washer	1196.V
Handle screws (4)	2870
O. ring (x4)	2871
Equipped upper shaft	2872
Interior geared crown	2873
Equipped output shaft	2874
Equipped spacer for potato ricer	2875
Nut holder + nut	2876

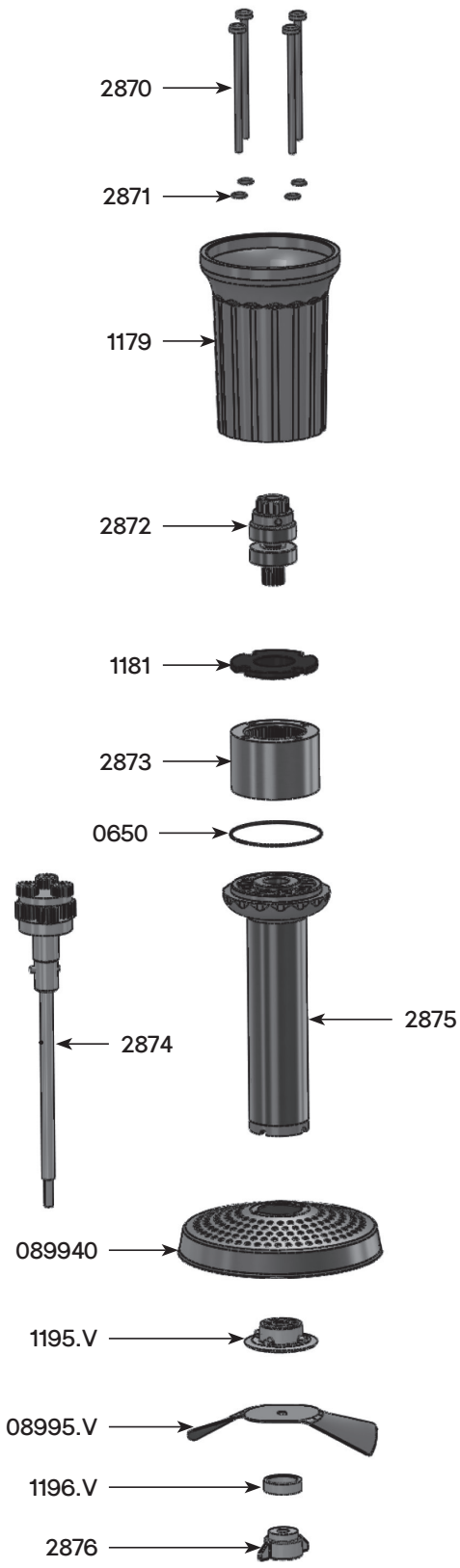

Potato grid assembly

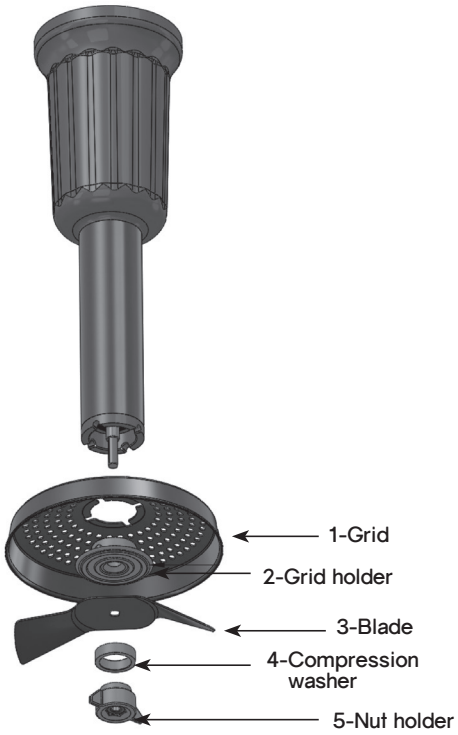

TECHNICAL SHEET

WHISK DYNAMIX - Ref AC516

Parts list	Code
Lower motor whisk housing	2890
Equipped output axle w/ 2 gears+pins	2891
Holder assembly w/ 3 self-lubricating rings	2892
Whisk tool (2)	2893
Reduction gear assembly (without whisk)	2894
Equipped upper shaft	4020
Equipped plate with rings	4021
Holder assembly screws	4022
Middle gear & axle	9420

Dynamix whisks

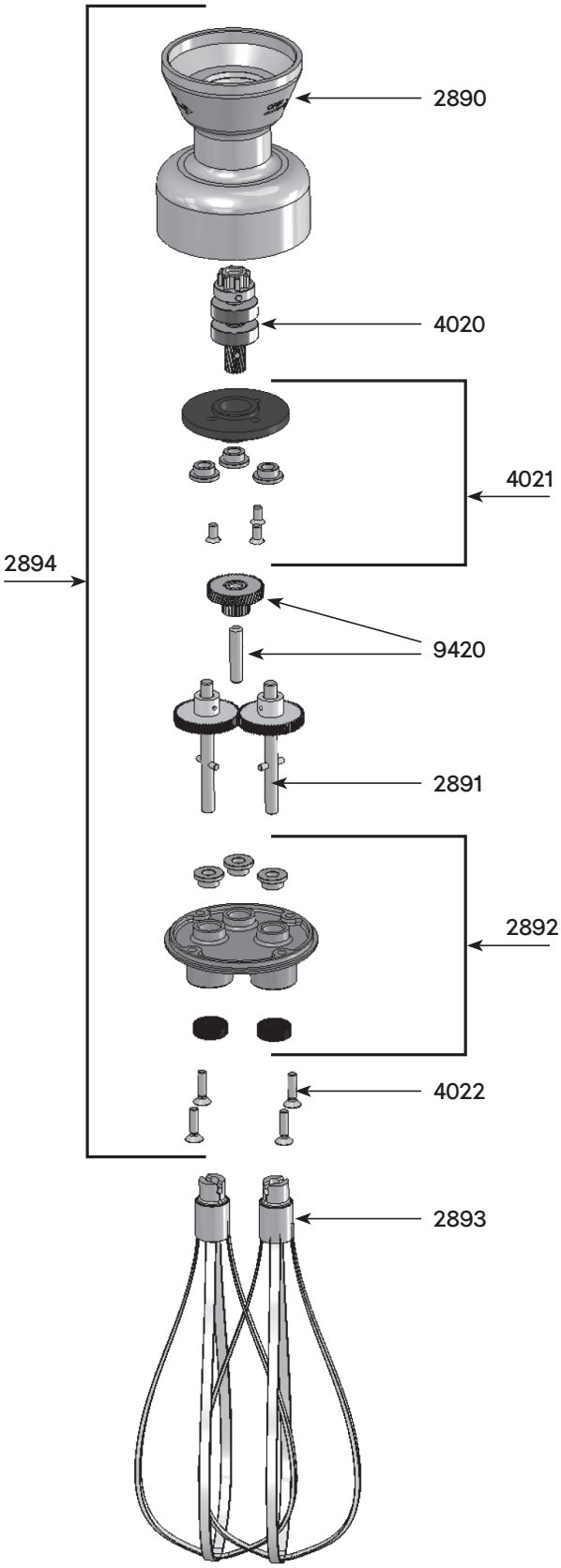

Whisk tool dismantling

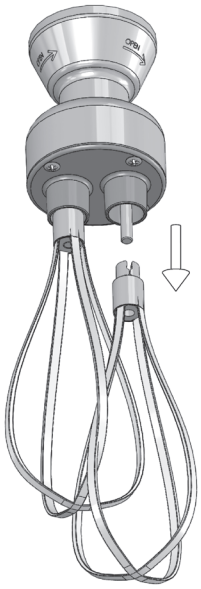

TECHNICAL SHEET

CUTTER BOWL DYNAMIX - Ref AC518

Parts list	Code
Base	1178.V
Equipped cover	2880
Blade	2881
Bowl	2882

Equipped lid 2880

O. ring	0658
O. ring (x4)	2871
Equipped upper shaft	2885
Handle screws (4)	2886
Reduction plate + ring	2887
Lid + reduction gear	2888

Blade 2881

A blade	08999904
B blade	08999905
Blade holder	1176
Equipped cone	2884
Set of screws (x3)	9502

Blade

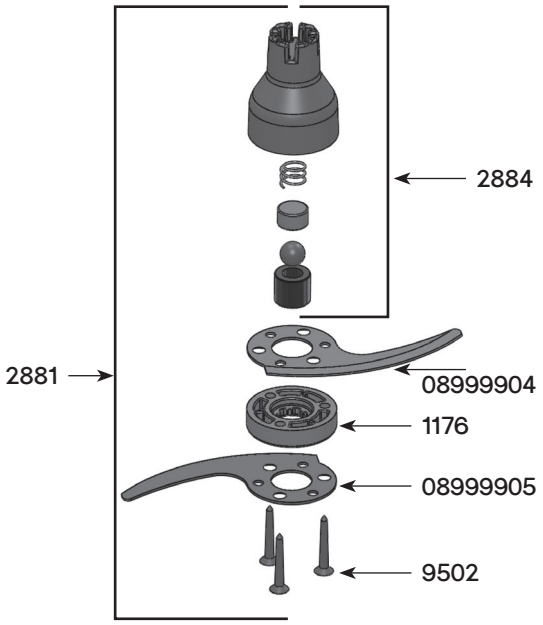

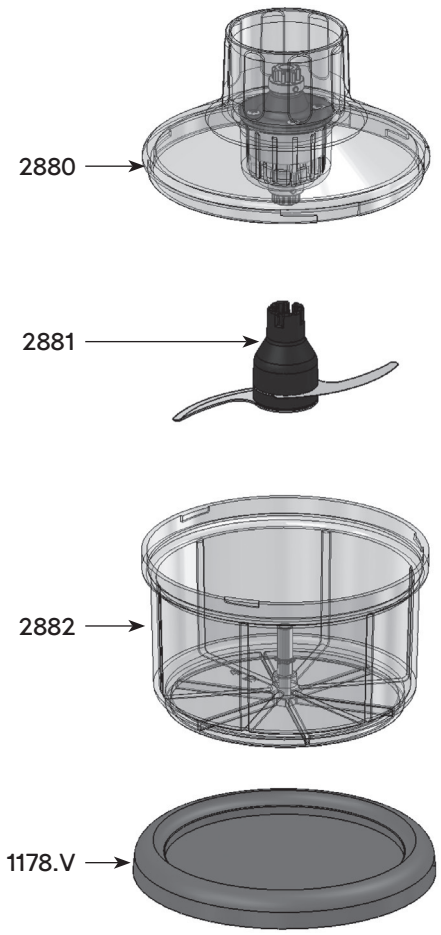
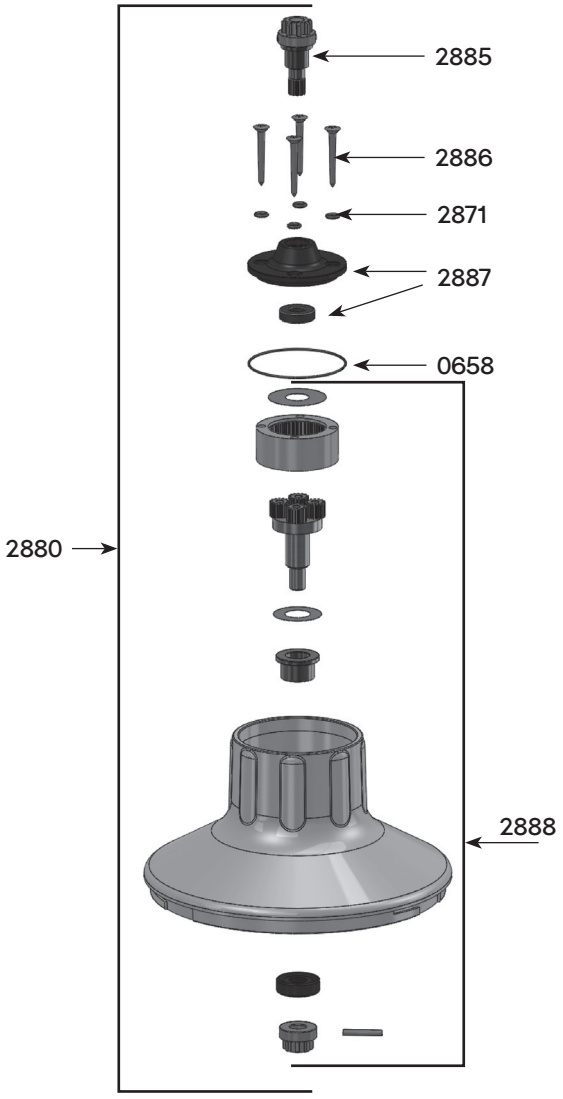
Equipped lid