Dynamic®

SENIOR SERIES

MX 300

Ref : MX007

DESCRIPTION

- Powerful, sturdy.
- Non detachable shaft: ensures durability of the mixer.
- Variable speed optional.
- Safety button.
- Double insulation.
- Stainless steel mixer tube and guard for easy cleaning and perfect hygiene.
- Titanium-plated blade easy to remove.
- Higher ventilation point, ensuring longer life to the mixer and avoiding any splash of water on the electrical parts.

USE

It allows to mix, directly in the pots, many applications including: fish soups, panades (thick soup reduced to puree), salad dressings, pancakes paste, gravies, sauces, mayonnaise, puree of vegetables lightly pulverized, porridge, raw carrots puree, fruits cream …

Capacity : 20 to 40 Liters

TECHNICAL DATA	
OUTPUT MAX	350 W
SPEED	9500 R.P.M.
VOLTAGE	110 - 120 V or 220 - 240 V
TOTAL LENGTH	600 mm
SHAFT LENGTH	300 mm
DIAMETER	97 mm
ACTUAL WEIGHT	2,7 kg

MAINTENANCE

Clean the outside of the tube and the blade protector by passing it under the faucet.

Wash the motor block with a sponge or with a slightly damp cloth.

Put the tube with the blade protector in clear water and start the machine for 3 seconds or more to clean the inside of the blade protector.

Never clean this machine with water jet spray or in the dishwasher.

www.dynamicmixers.com

Dynamic - 518 rue Léo Baekeland BP57 - 85290 Mortagne sur Sèvre
Tél : +33 (0)2 51 63 02 72 • **E-mail :** contact@dynamicmixers.com
Follow us on social networks !

Made in France
Fabriqué en France

TECHNICAL SHEET

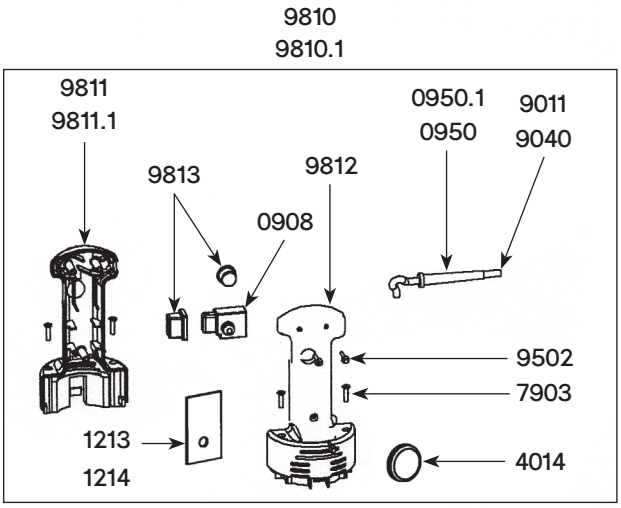

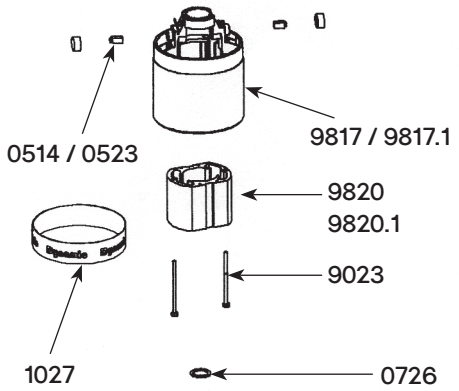

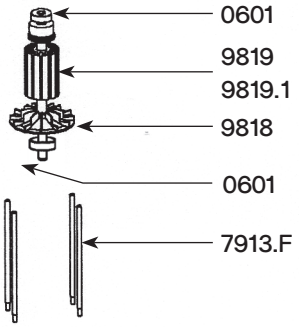

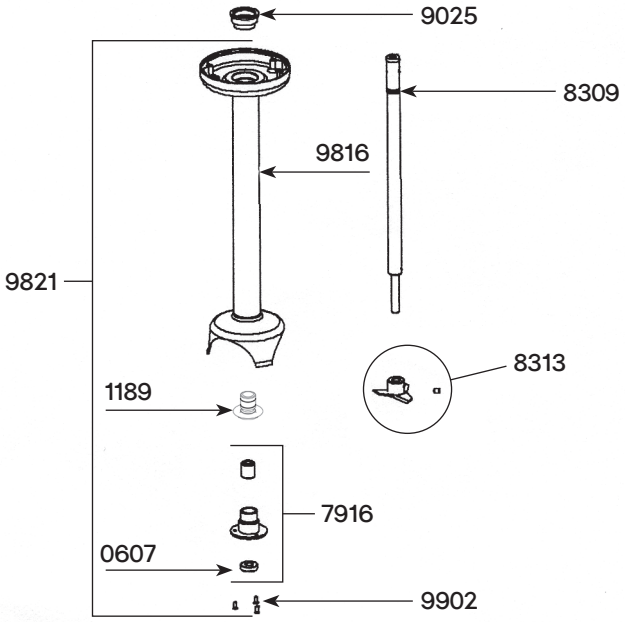
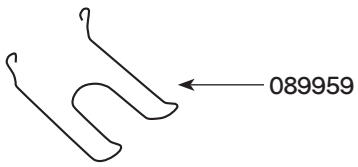
Parts list	Code
Carbon brushes (2) (230V)	0514
Carbon brushes (2) (115V) (from N°130803)	0523
Ball bearing	0601
Waterproof seal	0607
Squeezing washer	0726
Wall bracket	089959
Non-locking switch	0908
Strain relief 230 V	0950
Strain relief 115V	0950.1
Capacitor	0972.1
Warning label	1017
Dynamic label	1027
Label w/ serial number 230 V	1063
Label w/ serial number 115 V	1064
Bearing holder + seal	1189
Speed variator (option) (230V)	1213
Speed variator (option) (115V)	1214
Variable speed control knob	4014
Brace screws (4)	7903
Braces (4)	7913.F
Lower ball bearing assembly	7916
Shaft	8309
Cutter blade w/ screw	8313
Power cord 230 V	9011
Stator screws (2)	9023
Ball bearing ring	9025
Power cord 115 V	9040
Power cord (Australia)	9066
Power cord (UK)	9067
Handle screws (3)	9502
Complete handle 230 V	9810
Complete handle 115 V	9810.1
Lower half handle w/ label 230 V	9811
Lower half handle w/ label 115 V	9811.1
Upper half handle	9812
Switch protector (2)	9813
Motor & shaft housing + bearing	9816
Upper motor casing (w/ carbon brushes holders) (230V)	9817
Upper motor casing (w/ carbon brushes holders) (115V) (from N°130803)	9817.1
Fan	9818
Rotor 230 V	9819
Rotor 115 V	9819.1
Stator 230 V (w/ carter, carbon brushes holders)	9820
Stator 115 V (w/ carter, carbon brushes holders)	9820.1
Complete foot assembly	9821
Shaft, lower ball bearing & cutter assembly	9836
Lower bearing screws - Stainless steel (3)	9902