GIGAMIX SERIES

STANDARD VERSION

Ref : TB001 / TB001.1 - without variable speed control

Ref : TB002 / TB002.1 / TB002.2 - with variable speed control

Option : factory installed only

SPECIAL PRODUCTION KITCHENS, FOR HEAVY-DUTY MIXING.

CE

TECHNICAL DATA	
OUTPUT MAX	2.2 KW
SPEED	2800 to 4000 R.P.M.
VOLTAGE	230/400 V, tree-phase, 50 Hz*
MINIMUM HEIGHT - under bell -	500 mm
MAXIMUM HEIGHT - under bell -	790 mm
SHAFT LENGTH	570 mm
DIAMETER BELL	270 mm
ACTUAL WEIGHT	79 kg

*Other voltages on request.

DESCRIPTION

- Designed for high volumes, works directly in pots.
- Offers long service lifetime for intensive use.
- Powerful motor of 2.2 kW.
- 100% stainless steel for a perfect hygiene and unparalleled durability.
- Handy thanks to its wheels.
- Retractable and compact.
- Adjustable working height and foldable to allow minimum space for storage.

ACCESSORIES

- Blender tool: Ref. TB004
- Whisk tool: Ref. TB003
- Dynapump : Ref. TB030 and Gun : Ref. TB040
- Potato tool masher : Ref. TB013

USE

Mixer: Ideal to blend preparations (vegetable or fish soups…).

Blender: Mix, crush, grind, smooth into fine particles in a few minutes! This system provides a smooth, unctuous and airy texture.

Dynapump: With its innovative process, the DYNAMIC Pump perfectly adapts to the GIGAMIX blender foot to quickly and effortlessly transfer the mixed preparation into the packaging area.

VARIABLE SPEED COMPULSORY

Whisk: Ensures a perfect homogenization of preparations like instant mashed potatoes, dehydrated soups...

Potato tool masher: Especially designed for high volume preparations in central kitchens and collective catering. It allows to work from 50 to 150 kg of potatoes, carrots, celeriac, cauliflowers and broccolis all at one.

Capacity: 100 to 300 L.

MAINTENANCE

In a few seconds and without dismantling anything, the stainless steel tube and bell can be washed with clear water only. The tri-phased electric connection must be done by a professional.

It's preferable to regularly check the wear on bearings, seals and O-ring.

www.dynamicmixers.com

Dynamic - 518 rue Léo Baekeland BP57 - 85290 Mortagne sur Sèvre

Tel : +33 (0)2 51 63 02 72 • **E-mail :** export@dynamicmixers.com

Follow us on social networks!

Made in France - Fabriqué en France

ACCESSORIES

Potato tool masher
Variable speed compulsory

Ref. : **TB013**

Mixer tool

Ref. : **TB012**

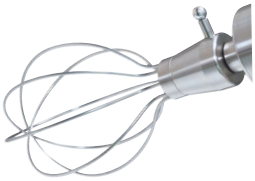

Whisk tool
Variable speed compulsory

Ref. : **TB003**

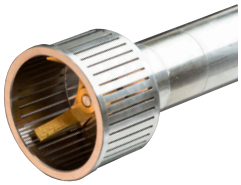

Blender tool

Ref. : **TB004**

SPEED	800 to 1600 R.P.M.	2800 to 4000 R.P.M.	400 to 600 R.P.M.	2800 to 4000 R.P.M.

Dynapump
adaptable on
Blender tool only

Ref. : **TB030**

Gun

Ref. : **TB040**

www.dynamicmixers.com

Dynamic - 518 rue Léo Baekeland BP57 - 85290 Mortagne sur Sèvre
Tel : +33 (0)2 51 63 02 72 • **E-mail :** export@dynamicmixers.com
Follow us on social networks!

Made in France
Fabriqué en France

VOLUME

TB001 / TB001.1
without variable speed control

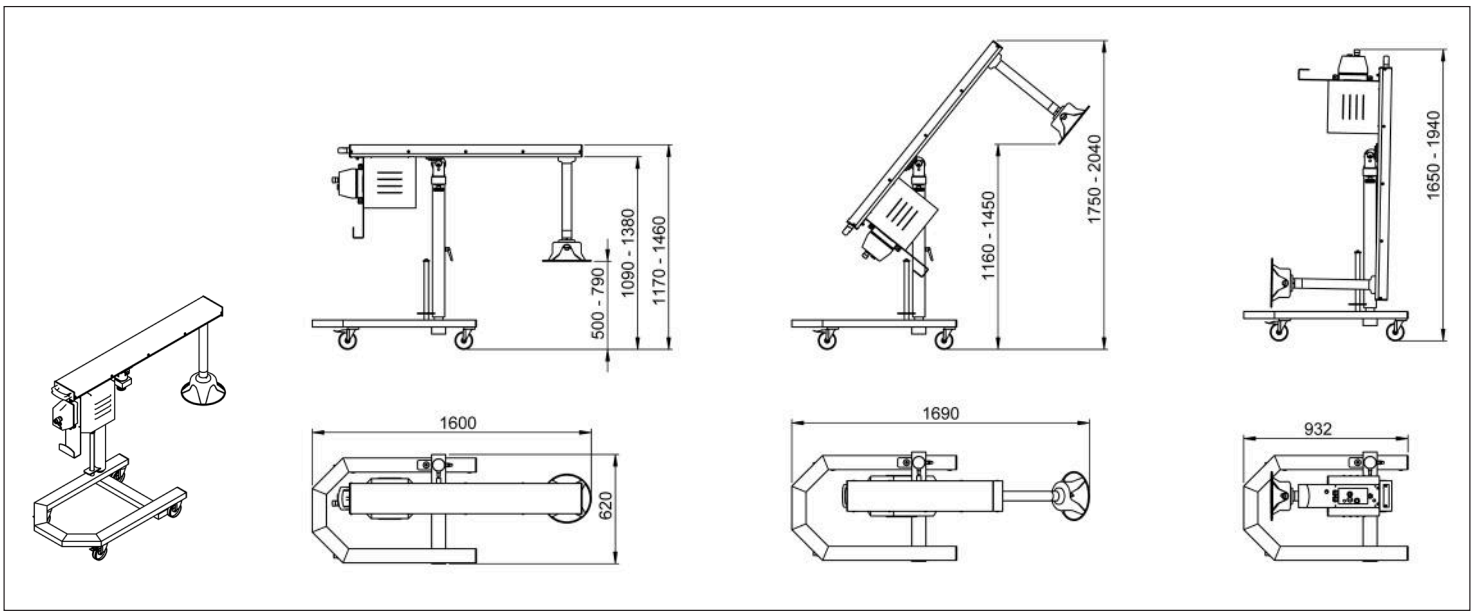

TB002 / TB002.1 / TB002.2
with variable speed control

Option : factory installed only

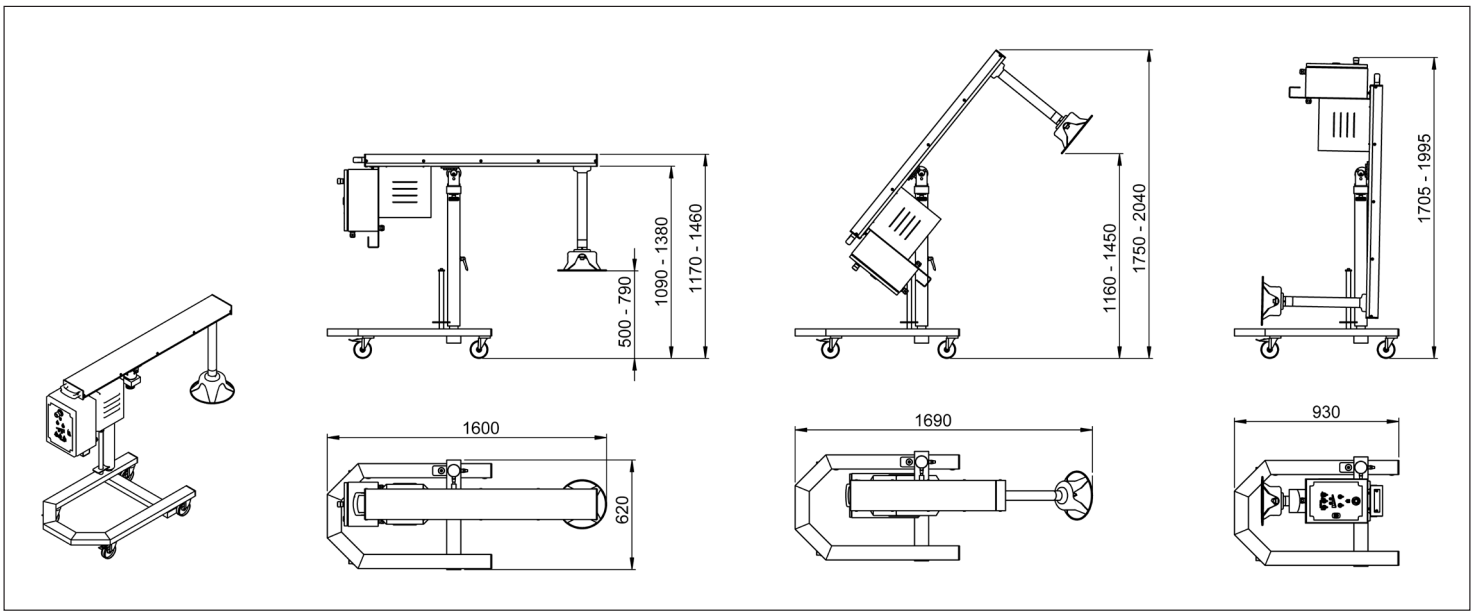

Pin-brake assembling 9352

Parts list	Code
Plain screw M8x30	0773
Insulating sheet	089916
Interpolated sheet	089927
Jib plate holder	089932
Microswitch + screws	9373
Pin-brake + eccentric + cam + cam axle	9374

Standard frame

Parts list	Code
Detachable handle	0793
Plain screw M6x30	07998
Jib	9346
Foot attachment	9350
Pin-brake	9352
Fixed wheel + screws (unit)	9353
Brake wheel + screws (unit)	9354
Frame + jib holder	9355
Washer	089953.V

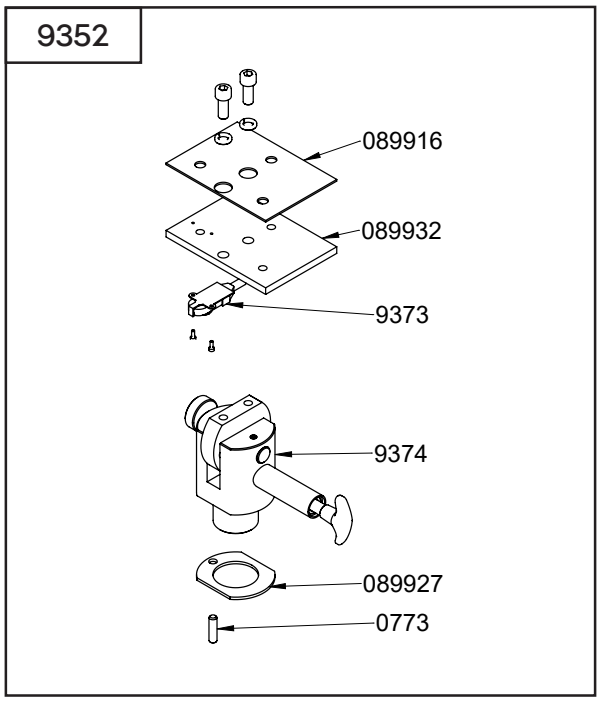

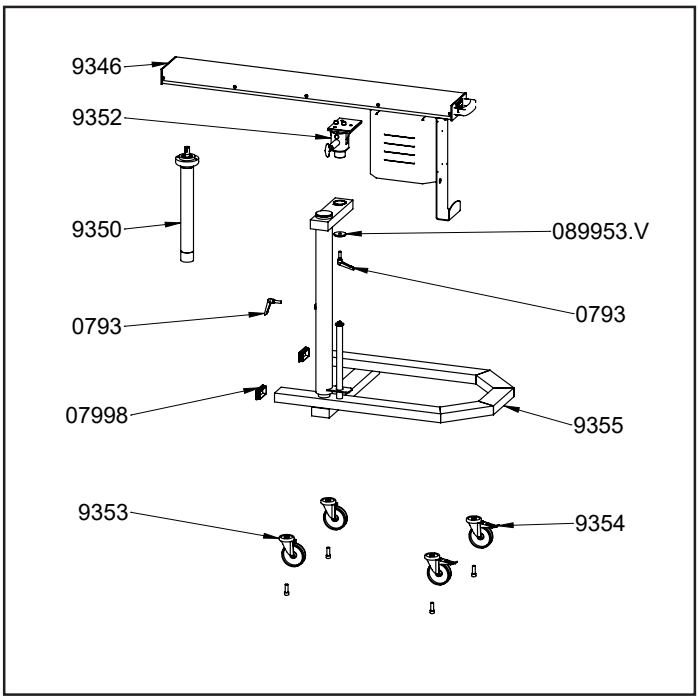

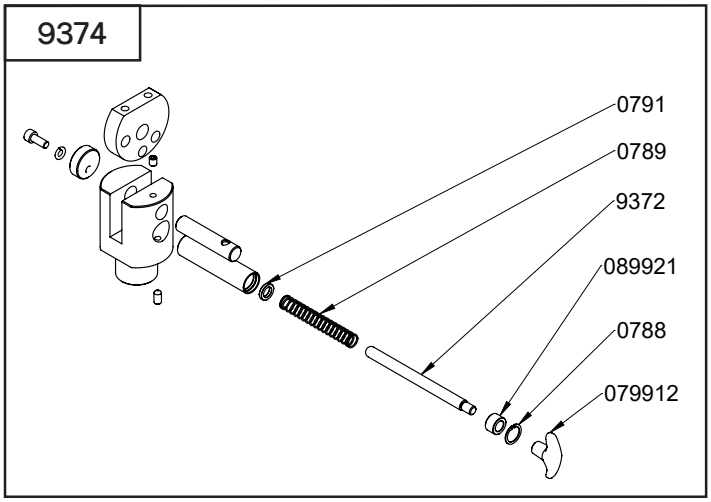

Pin-brake + eccentric + cam 9374

Parts list	Code
Rubber ring for brake thrust	0788
Compression spring	0789
Rubber ring for brake axle	0791
Handle for brake	079912
Brake thrust	089921
Brake axle	9372

Parts list	Code
Jib assembling	9346
Transmission belt	0625
Front jib cap for GIGAMIX	0786
Front jib cap for GIGAMIX	0786.P
jib holder	089914
Cover	089915
Motor housing	089931
Directing pulley + hub	9362
Conducting pulley + hub	9363
Screw set + washers for fixing the motor	9364
Screw set + washers for fixing the jib	9365
Screw set + washers for fixing the axle-brake	9366
Screw set + washers for fixing the tube	9367
Screw set + washers for fixing the cover	9368
Motor	9369
Screw set + nuts for fixing the steel sheet on the jib	9370
Screw set for fixing the steel sheet on the motor housing	9371
Handle	9077
Handle screws	9078

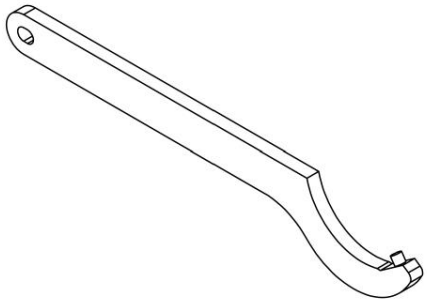

Parts list	Code
Spanner wrench	9388

9346

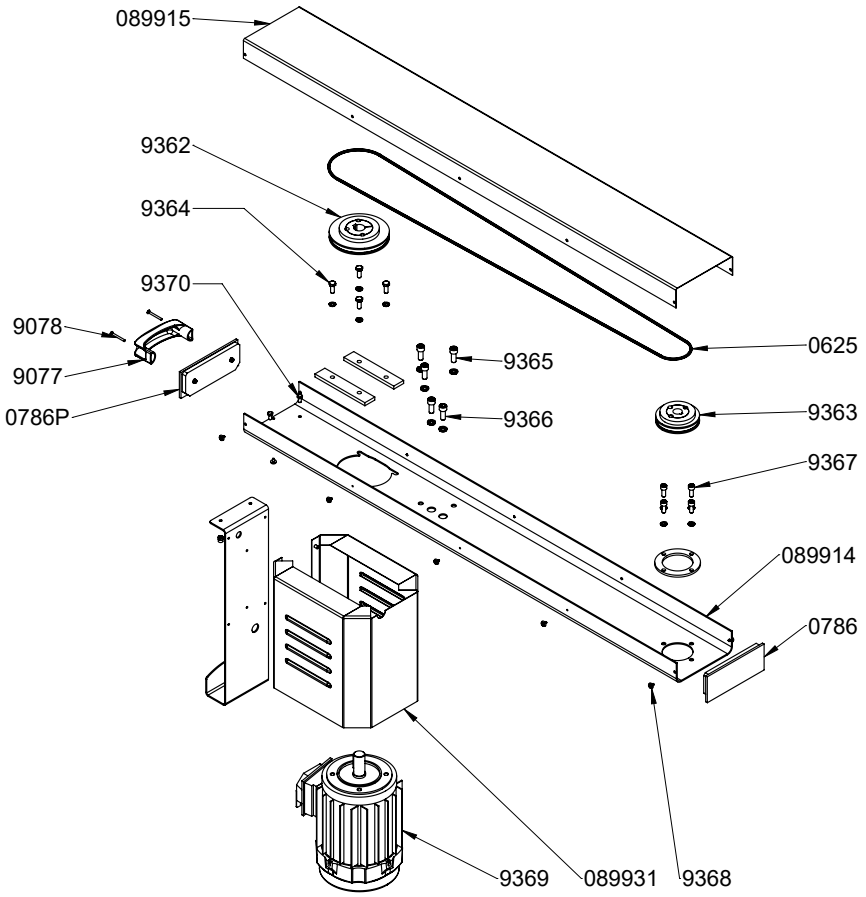

Parts list	Code
Electric casing	
Case + pe	9390
Stainless steel case + pe	9390.I
Contactor	9391
Variable speed tri 400 V + N 2.2 Kw	9392
Variable speed tri 240 V 2.2 Kw	9392.1
Variable speed MONO 240 V + N 2.2 Kw	9392.2
Terminal connector	9393
Stop push button	9394
Emergency stop button	9395
Led « power on »	9396
Start push button	9397
Button + potentiometer	9398
Case + pe	9399
Thermal relay	93991
Circuit board	93992
Three-phase power cord (5M)	93993
Single-phase power cord (5M)	93993.2

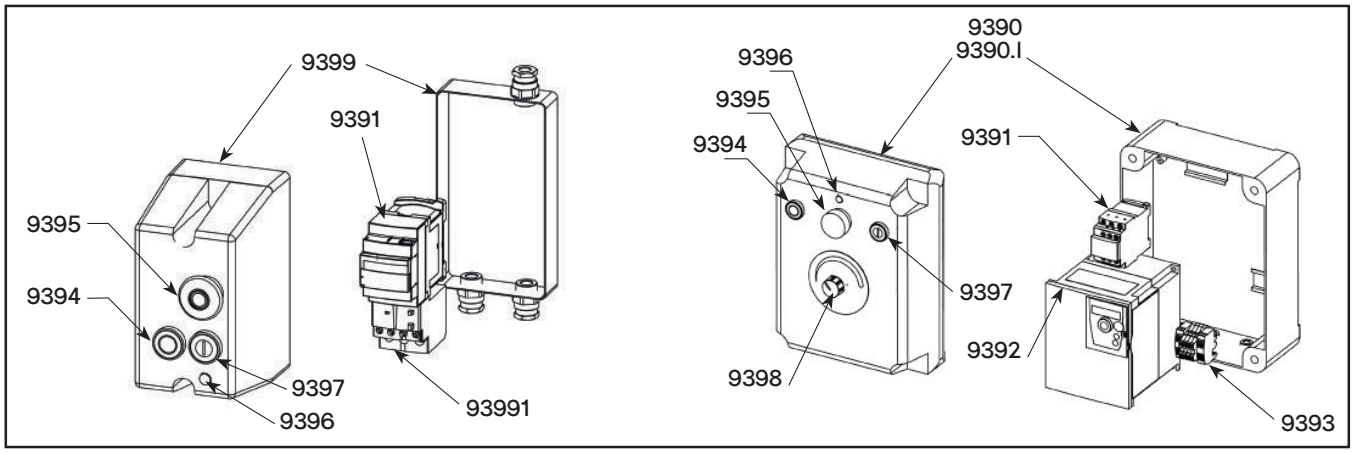

TECHNICAL SHEET

Parts list	Code
Foot attachment assembling	9350
Ball bearing (unit)	0621
Ball bearing	0633
Clips (2)	0772
Rubber ring for upper bearing holder	0792
Rubber ring case	079911
Bearing holder, brace, case	9360
Drive shaft	9361

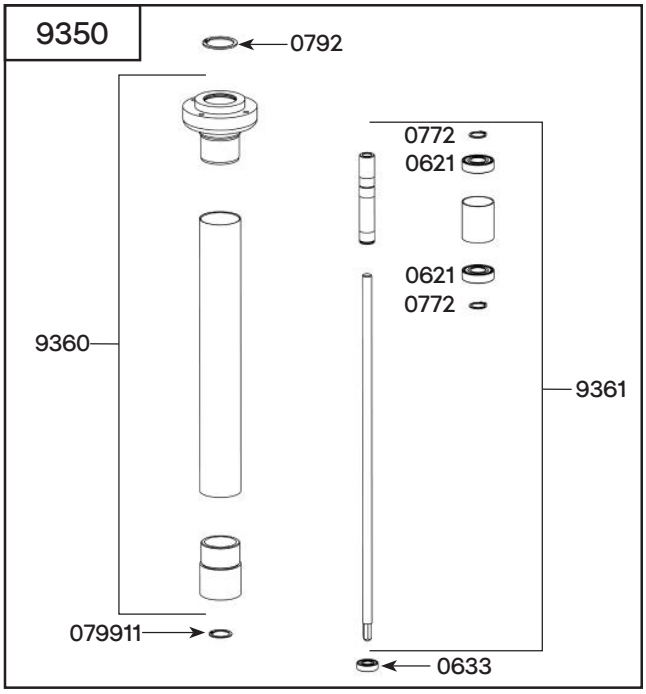

Parts list	Code
Mixer Tool Gigamix	TB012
O. ring	0618
O. ring	0639
O. ring	0640
Ball bearing	0649
Waterproof seal	0662
Rubber ring	0790
Lower bearing	089912
Seal support	089926
Waterproofness set (seals + ball bearing + screws + open head locking washer)	9349
Blade	9356
Lower shaft + bearing + coupling + clips	9357
Protection bell	9358
Assembling set of screw for the bell	9359

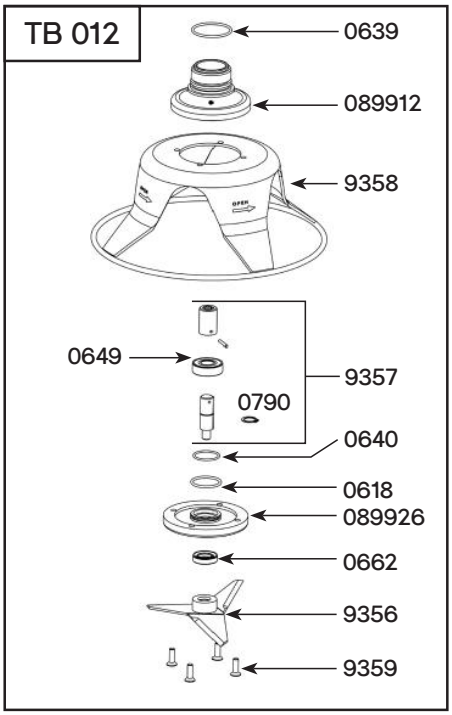

TECHNICAL SHEET

Parts list	Code
Upper removable foot	9330
Lower removable foot	9333
Mixer Tool Gigamix	TB012

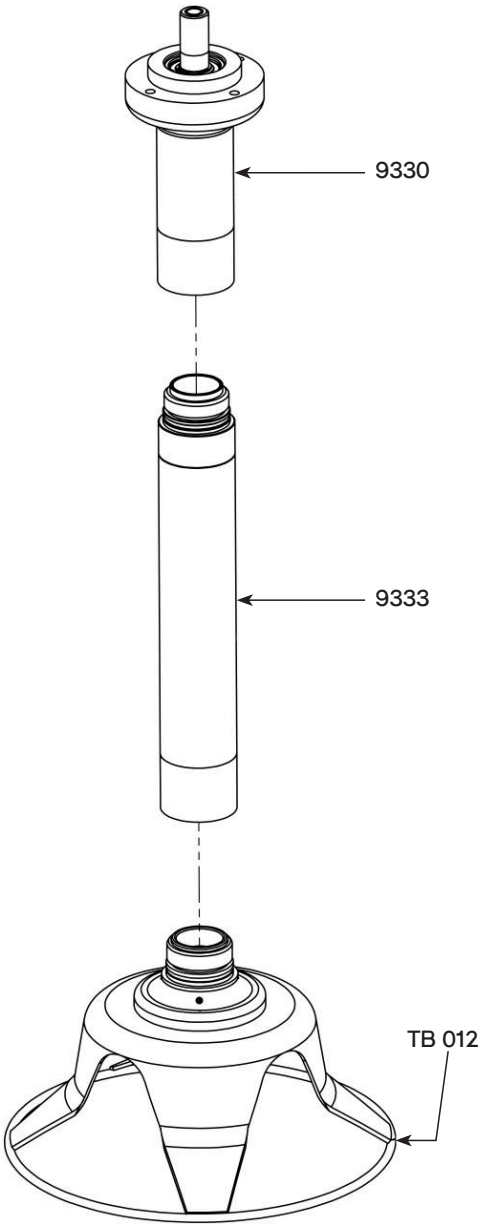

TECHNICAL SHEET

Parts list	Code
Ball bearing	0633
Rubber ring for upper bearing holder	0792
Rubber ring case	079911
Bearing holder, brace, case	9331
Drive shaft	9332

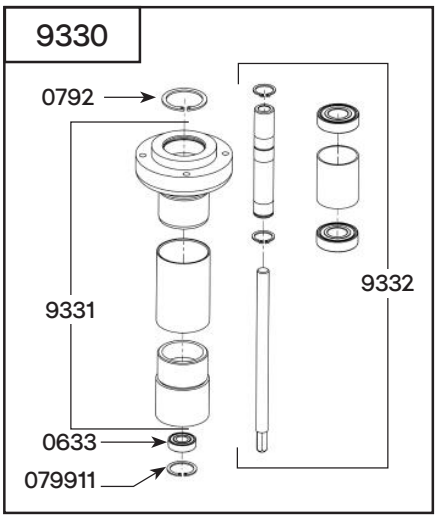

Parts list	Code
Ball bearing	0633
Toric joint 42 x 2.5	0639
Rubber ring for brake axle	0791
Rubber ring case	079911
Drive shaft	9334
Brace and case	9335

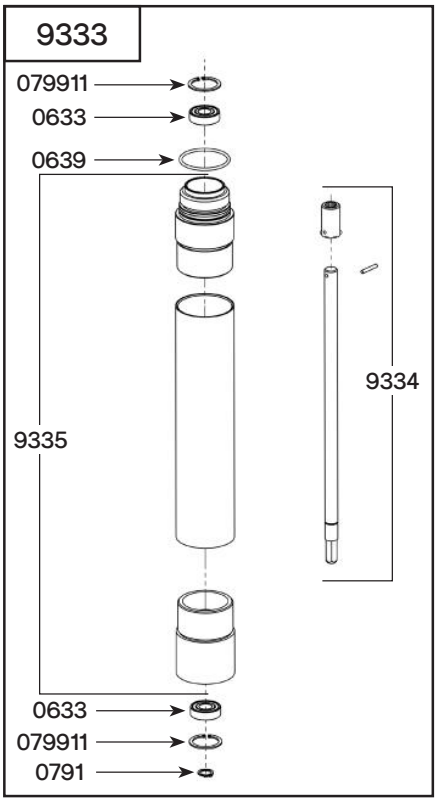

DYNAPUMP - Ref TB030

Parts list	Code
Right half clamp	08999930
Left half clamp	08999931
3/4 Stainless male cap	08999932
3/4 Stainless female reducer	08999933
Pump hinge	08999935
3/4 Male fitting	08999936
Hose nipple camlock fittings DN19	08999937
3/4 Hose nipple threaded connection	08999939
25-35 Hose clamp	08999940
Pump distribution gun	08999941
Pump locker + washer + butterfly nut	9347
Gigamix Gun	TB040
Hose pipe (2,5 cm)	TB045
Hose pipe with cam axle	TB046

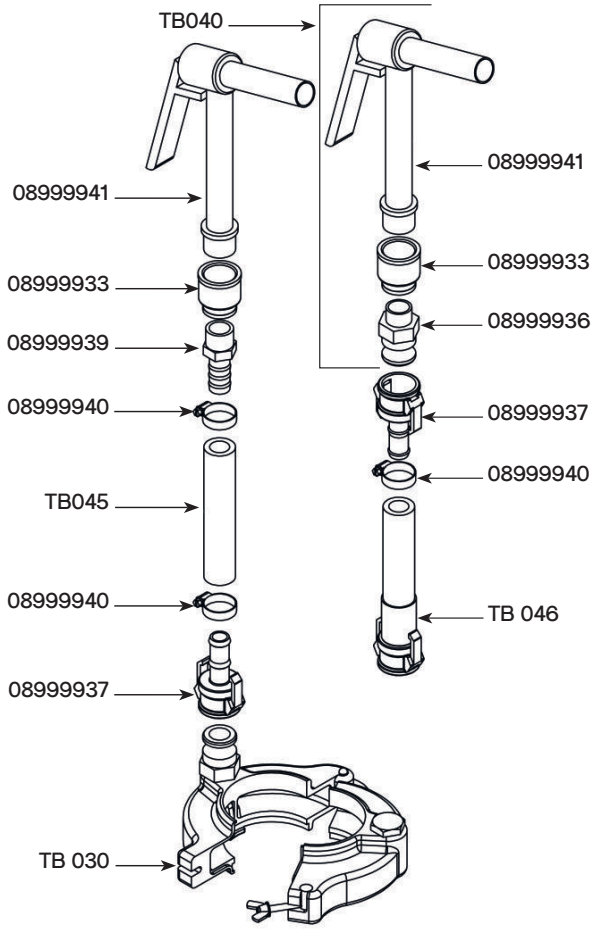

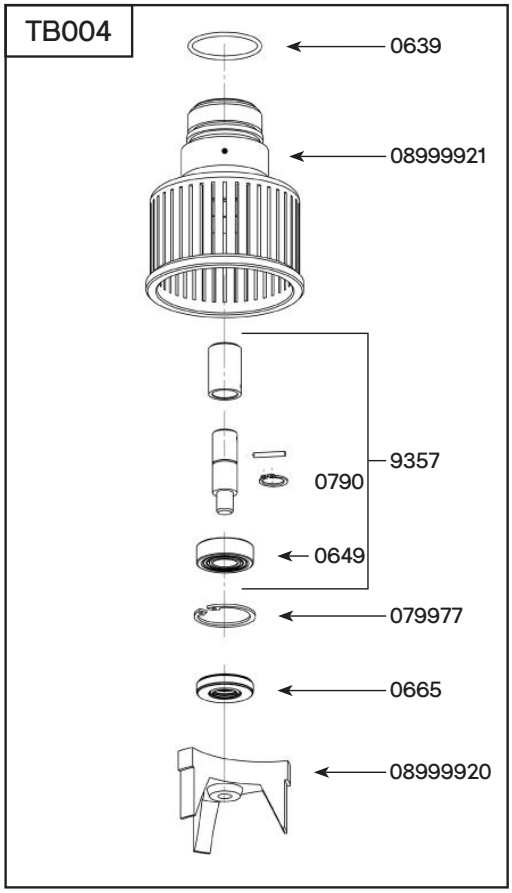

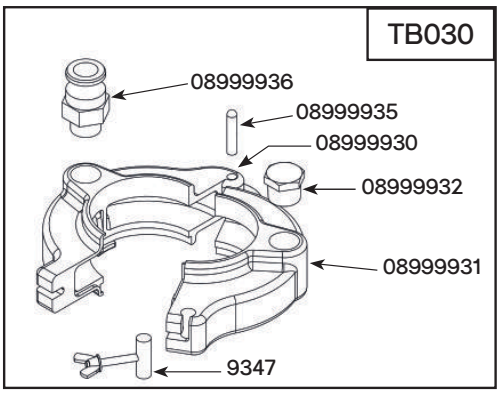

Parts list	Code
BLENDER FOOT GIGAMIX	TB004
Toric joint	0639
Ball bearing	0649
Waterproof seal	0665
Elastic ring Ø15	0790
Elastic ring Ø35	079977
Hammer	08999920
BLENDER GIGAMIX bell	08999921
Lower shaft + bearing + coupling + clips	9357
Waterproof set (seal+bear+screw+clips)	9348

TECHNICAL SHEET

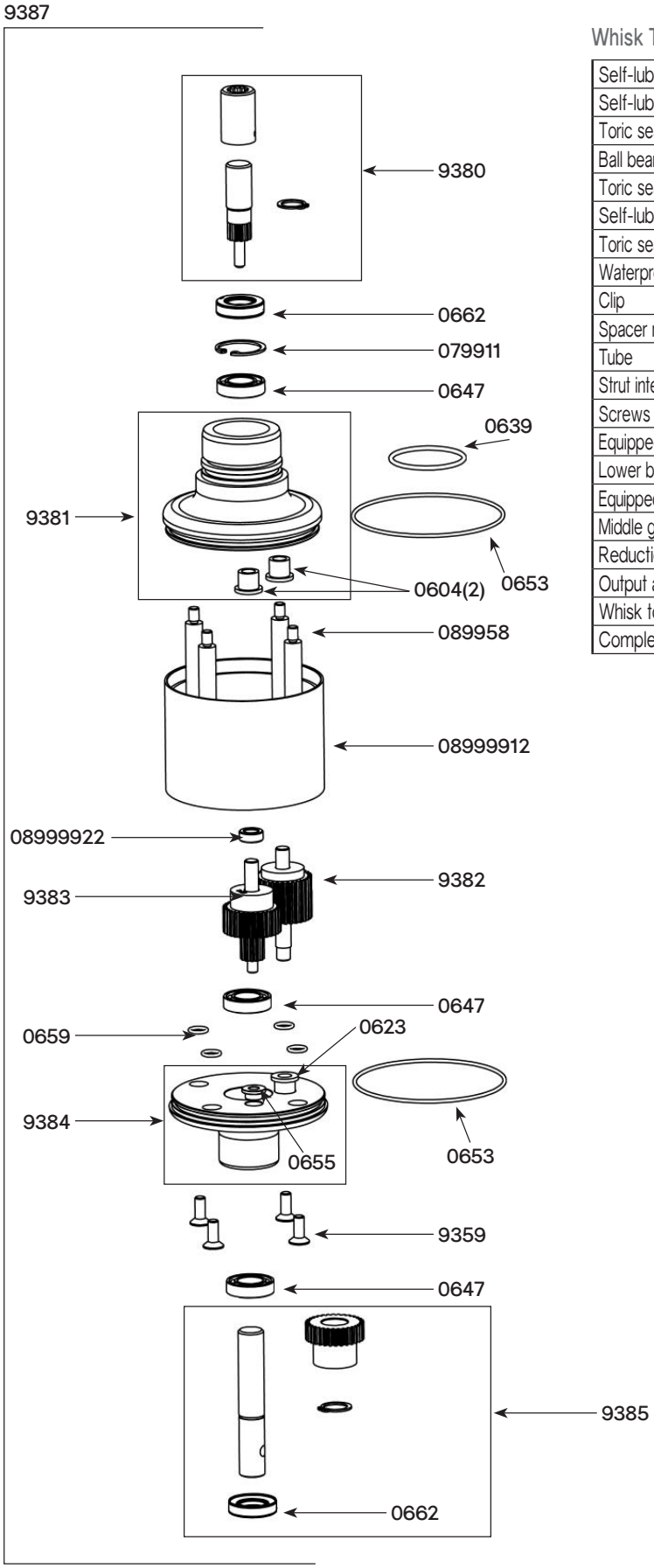
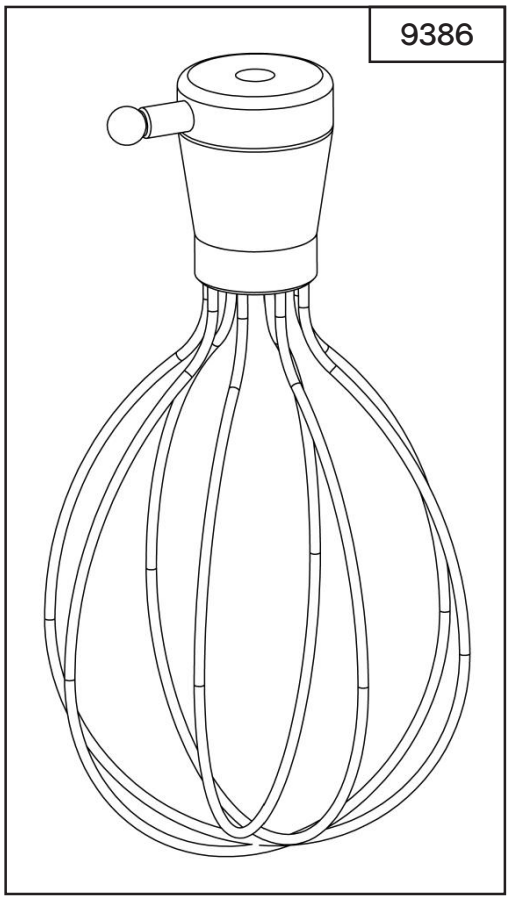
Parts list	Code
Whisk Tool Gigamix	TB003
Self-lubricating ring	0604
Self-lubricating ring for gearing (x 2)	0623
Toric seal 42 x 2.5	0639
Ball bearing	0647
Toric seal 86 x 2	0653
Self-lubricating ring	0655
Toric seal 8 x 1.9 (1)	0659
Waterproof ring	0662
Clip	079911
Spacer rod (1)	089958
Tube	08999912
Strut intermediate gear	08999922
Screws M6 (4)	9359
Equipped upper shaft	9380
Lower bearing + rings	9381
Equipped output axle w/ 2 gears	9382
Middle gear and shaft	9383
Reduction case holder + rings	9384
Output axle	9385
Whisk tool	9386
Complete reduction casing without whip	9387