DYNAMIX SERIES

DYNASHAKE

Ref : MX051

DISKS BLADES

DESCRIPTION

- Lightweight, quick, efficient and powerful.
- Detachable mixer tool that can be easily dismantled for easy cleaning and maintenance.
- Stainless steel mixer tube and guard.
- Titanium-plated blade easy to remove.
- Variable speed as standard.
- Ergonomic.
- Quiet.
- 1-litre-graduated bowl + cover.

USE

The Dynashake with its graduated bowl makes, with ease and at a great speed, perfect milkshakes, smoothies and cocktails.

Capacity : 1 to 4 Liters

TECHNICAL DATA	
OUTPUT MAX	220 W
SPEED	3000 to 13000 R.P.M.
VOLTAGE	110 - 120 V or 220 - 240 V
TOTAL LENGTH	425 mm
SHAFT LENGTH	190 mm
DIAMETER	70 mm
ACTUAL WEIGHT	1,5 kg

MAINTENANCE

Detachable accessories for easy cleaning. Clean the outside of the tube and the blade protector by passing it under the faucet.

Wash the motor block with a sponge or with a slightly damp cloth.

Never clean this machine with water jet spray or in the dishwasher.

Use the Dynamix support (Ref SM030) to store your device.

www.dynamicmixers.com

Dynamic - 518 rue Léo Baekeland BP57 - 85290 Mortagne sur Sèvre
Tél : +33 (0)2 51 63 02 72 • **E-mail :** contact@dynamicmixers.com
Follow us on social networks !

Made in France
Fabriqué en France

TECHNICAL SHEET

Parts list	Code
Strain relief 230 V	0989
Cover or handle screws (2)	079958
Cover	2840
White cover	2840.B
Hook	2841
Power cord 230V	2842
Power cord 115V	2842.1
Power cord UK	2842.2
Power cord Europe 230V - 1m50	2842M
Right handle	2843
White right handle	2843.B
Coupling	2846
Motor 230V - D160	2847
Motor 115V	2847.1
Motor 230V - D190	2847.2
160 Dynamix label	2848
190 Dynamix label	2848.2
Left handle	2849
White left handle	2849.B
Screws + washer + handle nuts (2)	2850
Hood	2851
White hood	2851.B
Circuit board 230V	2852
Circuit board 115V	2852.1
ID label D160 (230V)	2853
ID label D160 (115V)	2853.1
ID label D190 (230V)	2853.2
ID label Dynashake (230V)	2853.5
ID label Dynashake (115V)	2853.6
Motor belt	2854
Screws for motor belt (2)	2855
Variator knob	2858
Graduated variator knob	2858.G
Dynashake label 230 V	2862
Dynamix turbine	2865
Handle cap protectors	45710

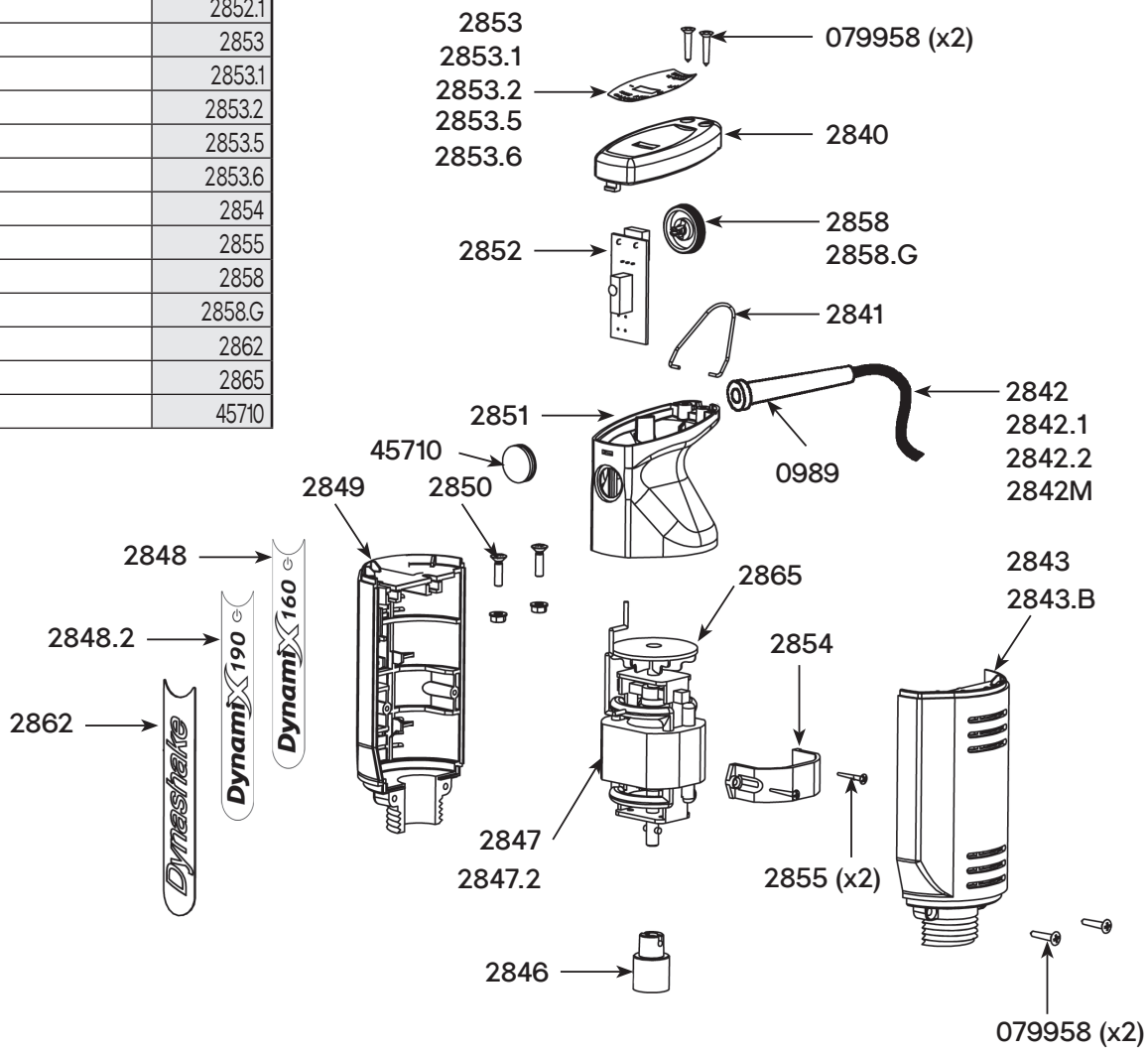

TECHNICAL SHEET

M Shake 190 - Ref AC530
(Complete attachment)

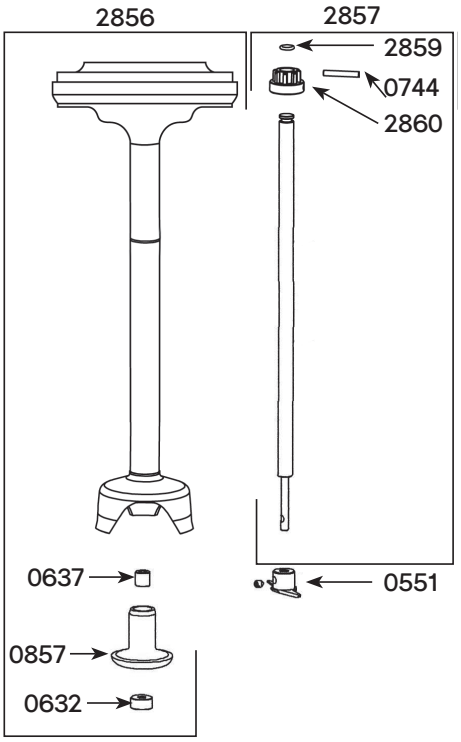

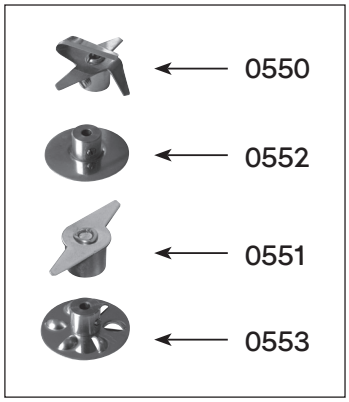

Parts list	Code
Self-lubricating ring	0666D
Waterproof seal	0667D
Emulsifying blade with screws	0550
Standard blade with screws	0551
Batter blade with screws	0552
Smoothie emulsifying blade with screws	0553
Double lip waterproof seal	0632
Self-lubricating ring	0637
Pins 3 x 20	0744
Bearing holder	0857
Brace with rings	1421
BLENDER DYNAMIX bell	1422
BLENDER DYNAMIX crushing knife	1423
Shaft (coupling, pin, O ring)	1424
Dismounting tool	1425
Shaft and bearing	2844
Dynamix foot assembly + ring + seal	2845
Extended Dynamix foot assembly + ring + seal	2845.XL
Dynashake foot assembly + ring + seal	2856
Shaft and bearing	2857
Driving shaft joint	2859
Coupling hub	2860