MASTER SERIES

DMX 410.HC

Ref : MX002.HC

DESCRIPTION

- Safety button with rubber protection against moisture.
- Continuous function auto run button allows to mix continuously or pulse.
- Ergonomic design for easy handling and easy cleaning.
- Higher ventilation point.
- Variable speed as standard.
- Indicator light: for your safety the light indicates that the unit is plugged in and ready for operation.
- Stainless steel mixer tube and guard for easy cleaning and perfect hygiene
- Titanium-plated blade with clip easily dismantled.
- Detachable tools : easy cleaning and maintenance and perfect hygiene, avoiding any splash of water on the electrical parts.

USE

It allows to mix, directly in the pots, many applications including: fish soups, panades (thick soup reduced to puree), salad dressings, pancakes paste, gravies, sauces, mayonnaise, puree of vegetables lightly pulverized, porridge, raw carrots puree, fruits cream …

Capacity : 40 to 100 Liters

TECHNICAL DATA	
OUTPUT MAX	600 W
SPEED	3000 to 10500 R.P.M.
VOLTAGE	110 V - 120 V or 220 V - 240 V
TOTAL LENGTH	720 mm
SHAFT LENGTH	410 mm
DIAMETER	122 mm
ACTUAL WEIGHT	3,7 kg

MAINTENANCE

Clean the outside of the tube and the blade protector by passing it under the faucet.

Beware of splashing that could penetrate through the engine's ventilation slots and damage it.

Put the tube with the blade protector in clear water and start the machine for 3 seconds or more to clean the inside of the blade protector.

Wash the motor block with a sponge or with a slightly damp cloth.

Never clean this machine with water jet spray or in the dishwasher.

www.dynamicmixers.com

Dynamic - 518 rue Léo Baekeland BP57 - 85290 Mortagne sur Sèvre
Tél : +33 (0)2 51 63 02 72 • **E-mail :** contact@dynamicmixers.com
Follow us on social networks !

Made in France
Fabriqué en France

ACCESSORIES

STANDARD MOTOR BLOCK

Ref. : **AC001**

CAPACITY	20 to 100 Liters
SHAFT LENGTH AC002.H	410 mm
SHAFT LENGTH AC002.HC	410 mm
SHAFT LENGTH AC500	500 mm
SHAFT LENGTH AC260.HC	300 mm
SPEED R.P.M.	3 000 / 10 500

Mixer tools

M 410.H
Ref. : **AC002.H**

M 410.HC
Ref. : **AC002.HC**

M 500
Ref. : **AC500**

M 300 CC MASTER
Ref. : **AC260.HC**

CAPACITY	5 to 40 Liters
SHAFT LENGTH AC070	410 mm
LONGUEUR PIED AC265	300 mm
SPEED R.P.M.	3 000 / 10 500

Blender tools

BLENDER MASTER
Ref. : **AC070**

BLENDER CC MASTER
Ref. : **AC265**

CAPACITY	5 to 20 Liters
WHISKS LENGTH	245 mm
SPEED R.P.M.	300 / 900

Extractable whisks

Ref. : **AC003**

CAPACITY	10 to 30 kg
SHAFT LENGTH	420 mm
SPEED R.P.M.	100 / 600

Ricer tool

Ref. : **AC004**

CAPACITY	20 to 200 Liters
SHAFTS LENGTH	420 / 600 / 700 mm
SPEED R.P.M.	100 / 600

Master beater whisks FM420 / FM600 / FM700

Ref. : **AC202 / AC200 / AC201**

CAPACITY	5 Liters
HEIGHT	600 mm
SPEED R.P.M.	400 / 1 500

Bol Cutter Master with a selection of knives (standard or serrated)

Ref. : **AC055**

www.dynamicmixers.com

Dynamic - 518 rue Léo Baekeland BP57 - 85290 Mortagne sur Sèvre
Tél : +33 (0)2 51 63 02 72 • **E-mail :** contact@dynamicmixers.com
Follow us on social networks !

Made in France
Fabriqué en France

TECHNICAL SHEET

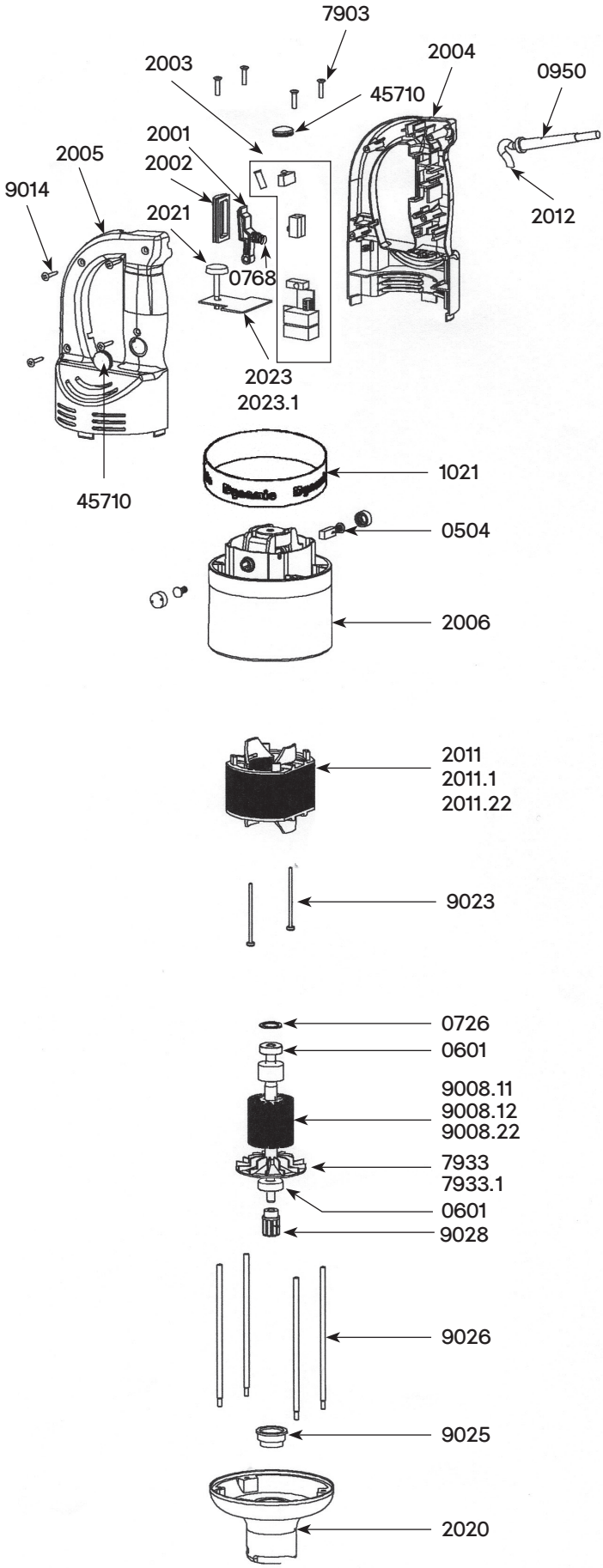

Parts list	Code
Carbon brushes (2)	0504
Ball bearing	0601
Squeezing washer	0726
Safety button return spring	0768
Strain relief 230 V	0950
Strain relief 115 V	0950.1
C.E.M. Filter	0999.20
Warning label	1017
Dynamic label	1021
ID label 230 V	1075
ID label 115 V	1076
Micro switch	1237
Power on indicator light 230 V	1241
Power on indicator light 115 V	1241.1
Control lever	2001
Control lever protector	2002
Circuit board 230 V (4 switches + capacitor)	2003
Circuit board 115 V (4 switches + capacitor)	2003.1
Half handle (button side)	2004
Half handle (label side)	2005
Motor housing brush holder	2006
Speed control plug	2008
Complete handle 230 V	2010
Complete handle 115	2010.1
Stator 230 V	2011
Stator 115 V	2011.1
Stator from n° 17/00001	2011.22
Power cord 230 V > 2002	2012
Power cord 115 V > 2002	2012.1
Power cord (UK) > 2002	2012.2
Power cord (Australia) > 2002	2012.3
Lower aluminum housing	2020
Speed variator knob	2021
Complete handle 230 V with variator (from N°040132)	2022
Complete handle 115 V with variator (from N°040132)	2022.1
Speed variator 230 V	2023
Speed Variator 115 V	2023.1
Brace screws (4)	7903
Fan	7933
Fan from n° 17/00001	7933.1
Rotor 115 V	9008.11
Rotor 230 V	9008.12
Rotor from n° 17/00001	9008.22
Power cord 230 V < 2002	9011
Handle screws (4)	9014
Field brace screws (2)	9023
Motor ball bearing sleeve	9025
Brace (4)	9026
Coupler for armature	9028
Power cord 115 V < 2002	9040
Carbon brush wires 230 V	9043
Power cord (Australia) < 2002	9066
Carbon brush wires 115 V	9143
Safety cover	45710

TECHNICAL SHEET

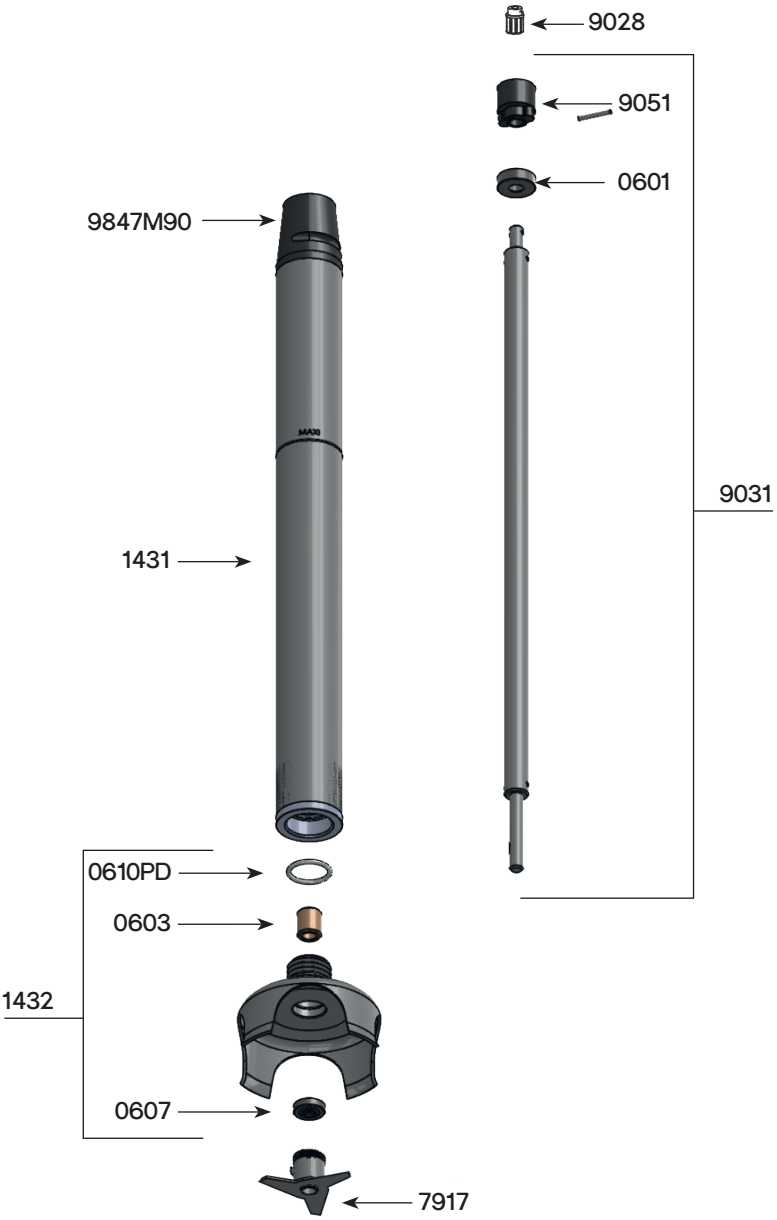

M 410.H - Ref AC002.H
(Complete attachment)

Parts list	Code
Ball bearing	0601
Self-lubricating ring	0603
Waterproof seal	0607
O. ring	0610PD
Tube assembly + bearing	1431
Bell	1432
Cutter blade w/ screw	7917
Coupler for armature	9028
Shaft	9031
Coupling casing + pin	9051
Black tip	9847M90
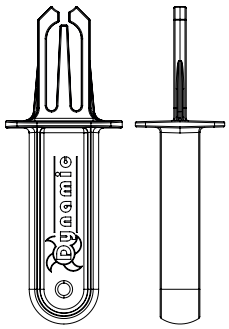
119962