DYNAMIX SERIES

DMX 160

Ref : MX050

DISKS
BLADES

DESCRIPTION

- Lightweight, quick, efficient and powerful.
- Detachable mixer tool that can be easily dismantled for easy cleaning.
- Stainless steel mixer tube and guard for perfect hygiene.
- Titanium-plated blade easy to remove.
- Variable speed as standard.
- Ergonomic.
- Quiet.
- Multifunction thanks to its interchangeable attachments (standard or emulsifying blades, beater or emulsifying disks, detachable whisks, ricer/foodmill attachment, cutter bowl, 1- or 3-litre-graduated bowl).

ACCESSORIES

USE

Mixer : Indispensable for the preparation of soups, salad dressings, gravies, sauces, mayonnaise, refried beans and many other applications.

Blender tool : It allows to crush, mix and smooth excellent soups, sauces, fruit creams directly in the pots. In just 3 minutes you get a smooth and perfect texture.

Whisks : To prepare batters, creams and mousselines easily.

Ricer tool : Perfect to realize purees or smooth vegetable creams, compotes...

Cutter : It allows to crush, mix, chop vegetables, garlic, onions, herbs, parsley, nuts, almonds, meats, Parmesan, etc.

Capacity : 1 to 4 Liters

MAINTENANCE

Detachable accessories for easy cleaning. Clean the accessories by passing them under the faucet.

Wash the motor block with a sponge or with a slightly damp cloth.

Never clean this machine with water jet spray or in the dishwasher.

Use the Dynamix support (Ref SM030) to store your device.

TECHNICAL DATA	
OUTPUT MAX	220 W
SPEED	3000 to 13000 R.P.M.
VOLTAGE	110 - 120 V or 220 - 240 V
TOTAL LENGTH	395 mm
SHAFT LENGTH	160 mm
DIAMETER	55 mm
ACTUAL WEIGHT	1 kg

www.dynamicmixers.com

Dynamic - 518 rue Léo Baekeland BP57 - 85290 Mortagne sur Sèvre
Tél : +33 (0)2 51 63 02 72 • **E-mail :** contact@dynamicmixers.com
Follow us on social networks !

Made in France
Fabriqué en France

ACCESSORIES

STANDARD MOTOR BLOCK

Ref. : **AC515**

CAPACITY	1 to 8 Liters
SHAFT LENGTH	160 mm
SPEED R.P.M.	3 000 / 13 000

Mixer tools

Emulsifying knife - 4 blades
Ref. : **AC520**

Standard knife - 2 blades
Ref. : **AC521**

Beater disk
Ref. : **AC522**

Emulsifying disk
Ref. : **AC523**

CAPACITY	1 to 8 Liters
SHAFT LENGTH	190 mm
SPEED R.P.M.	3 000 / 13 000

Shake tools

Emulsifying knife - 4 blades
Ref. : **AC530**

Standard knife - 2 blades
Ref. : **AC531**

Beater disk
Ref. : **AC532**

Emulsifying disk
Ref. : **AC533**

CAPACITY	1 to 4 Liters
SHAFT LENGTH AC560	160 mm
SHAFT LENGTH AC535	160 mm
SHAFT LENGTH AC534	190 mm
SPEED R.P.M.	3 000 / 13 000

Blender tool

Ref. : **AC560**

Ref. : **AC535**

Ref. : **AC534**

CAPACITY	1 to 4 Liters
WHISKS LENGTH	185 mm
SPEED R.P.M.	600 / 2 500

Extractable whisks

Ref. : **AC516**

CAPACITY	1 to 5 kg
SHAFT LENGTH	126 mm
SPEED R.P.M.	70 / 300

Ricer tool

Ref. : **AC517**

CAPACITY	0,8 Liter
HEIGHT	200 mm
SPEED R.P.M.	600 / 2 500

Cutter bowl

Ref. : **AC518**

www.dynamicmixers.com

Dynamic - 518 rue Léo Baekeland BP57 - 85290 Mortagne sur Sèvre
Tél : +33 (0)2 51 63 02 72 • **E-mail :** contact@dynamicmixers.com
Follow us on social networks !

Made in France
Fabriqué en France

TECHNICAL SHEET

Parts list	Code
Strain relief 230 V	0989
Cover or handle screws (2)	079958
Cover	2840
White cover	2840.B
Hook	2841
Power cord 230V	2842
Power cord 115V	2842.1
Power cord UK	2842.2
Power cord Europe 230V - 1m50	2842M
Right handle	2843
White right handle	2843.B
Coupling	2846
Motor 230V - D160	2847
Motor 115V	2847.1
Motor 230V - D190	2847.2
160 Dynamix label	2848
190 Dynamix label	2848.2
Left handle	2849
White left handle	2849.B
Screws + washer + handle nuts (2)	2850
Hood	2851
White hood	2851.B
Circuit board 230V	2852
Circuit board 115V	2852.1
ID label D160 (230V)	2853
ID label D160 (115V)	2853.1
ID label D190 (230V)	2853.2
ID label Dynashake (230V)	2853.5
ID label Dynashake (115V)	2853.6
Motor belt	2854
Screws for motor belt (2)	2855
Variator knob	2858
Graduated variator knob	2858.G
Dynashake label 230 V	2862
Dynamix turbine	2865
Handle cap protectors	45710

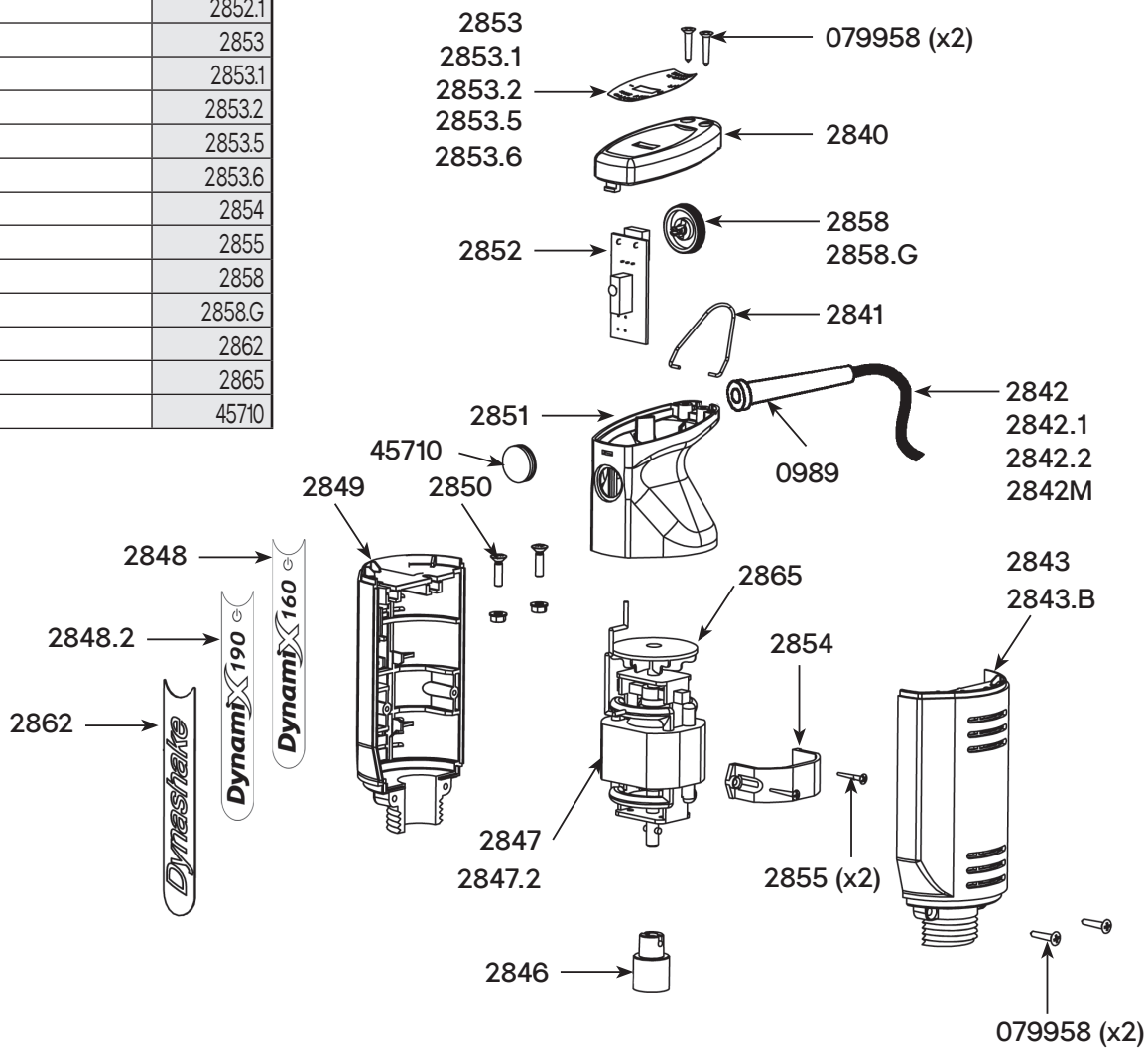

TECHNICAL SHEET

M 160 - Ref AC520
(Complete attachment)

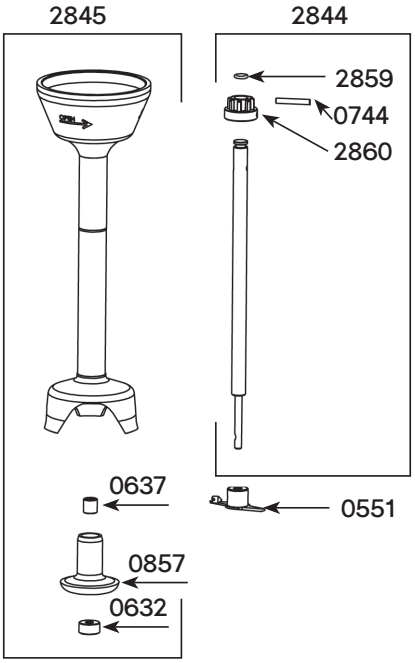

Blender Dynamix® - Ref AC560
(Complete attachment)

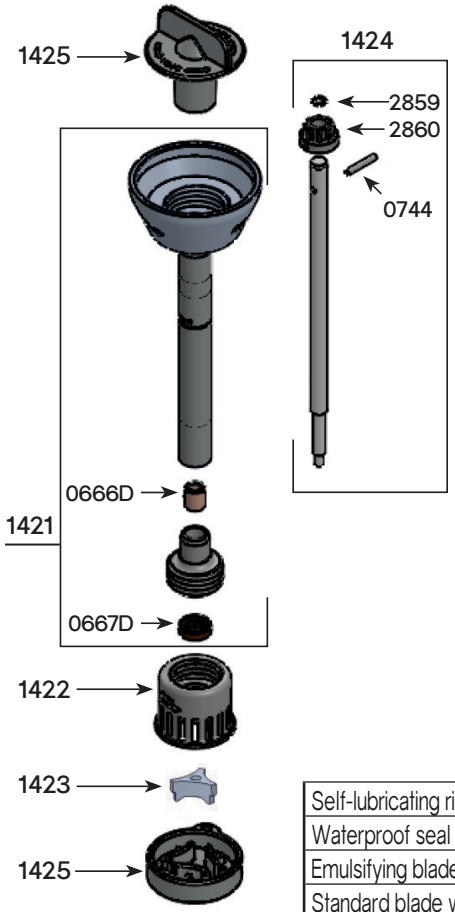

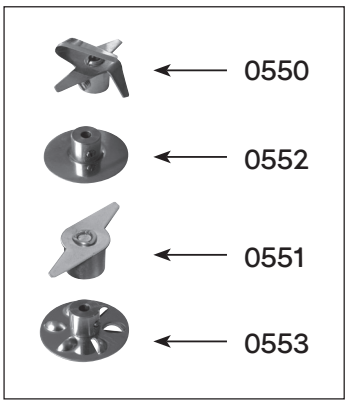

Parts list	Code
Self-lubricating ring	0666D
Waterproof seal	0667D
Emulsifying blade with screws	0550
Standard blade with screws	0551
Batter blade with screws	0552
Smoothie emulsifying blade with screws	0553
Double lip waterproof seal	0632
Self-lubricating ring	0637
Pins 3 x 20	0744
Bearing holder	0857
Brace with rings	1421
BLENDER DYNAMIX bell	1422
BLENDER DYNAMIX crushing knife	1423
Shaft (coupling, pin, O ring)	1424
Dismounting tool	1425
Shaft and bearing	2844
Dynamix foot assembly + ring + seal	2845
Extended Dynamix foot assembly + ring + seal	2845.XL
Dynashake foot assembly + ring + seal	2856
Shaft and bearing	2857
Driving shaft joint	2859
Coupling hub	2860

TECHNICAL SHEET

RICER TOOL DYNAMIX - Ref AC517
(Complete attachment)

Parts list	Code
O. ring	0650
Potato blade	08995.V
Potato grid	089940
Ricer inferior carter	1179
Secured washer	1181
Grid holder	1195.V
Compression washer	1196.V
Handle screws (4)	2870
O. ring (x4)	2871
Equipped upper shaft	2872
Interior geared crown	2873
Equipped output shaft	2874
Equipped spacer for potato ricer	2875
Nut holder + nut	2876

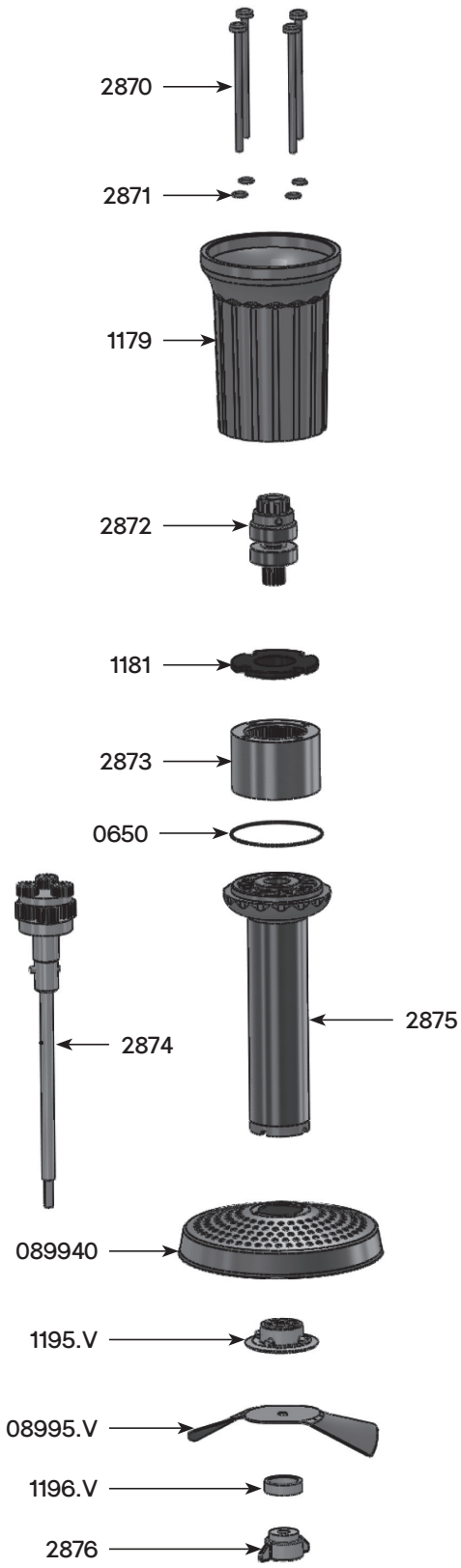

Potato grid assembly

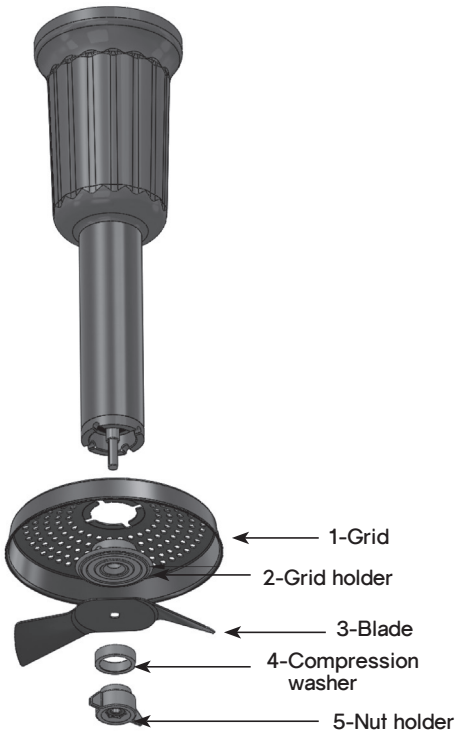

TECHNICAL SHEET

WHISK DYNAMIX - Ref AC516

Parts list	Code
Lower motor whisk housing	2890
Equipped output axle w/ 2 gears+pins	2891
Holder assembly w/ 3 self-lubricating rings	2892
Whisk tool (2)	2893
Reduction gear assembly (without whisk)	2894
Equipped upper shaft	4020
Equipped plate with rings	4021
Holder assembly screws	4022
Middle gear & axle	9420

Dynamix whisks

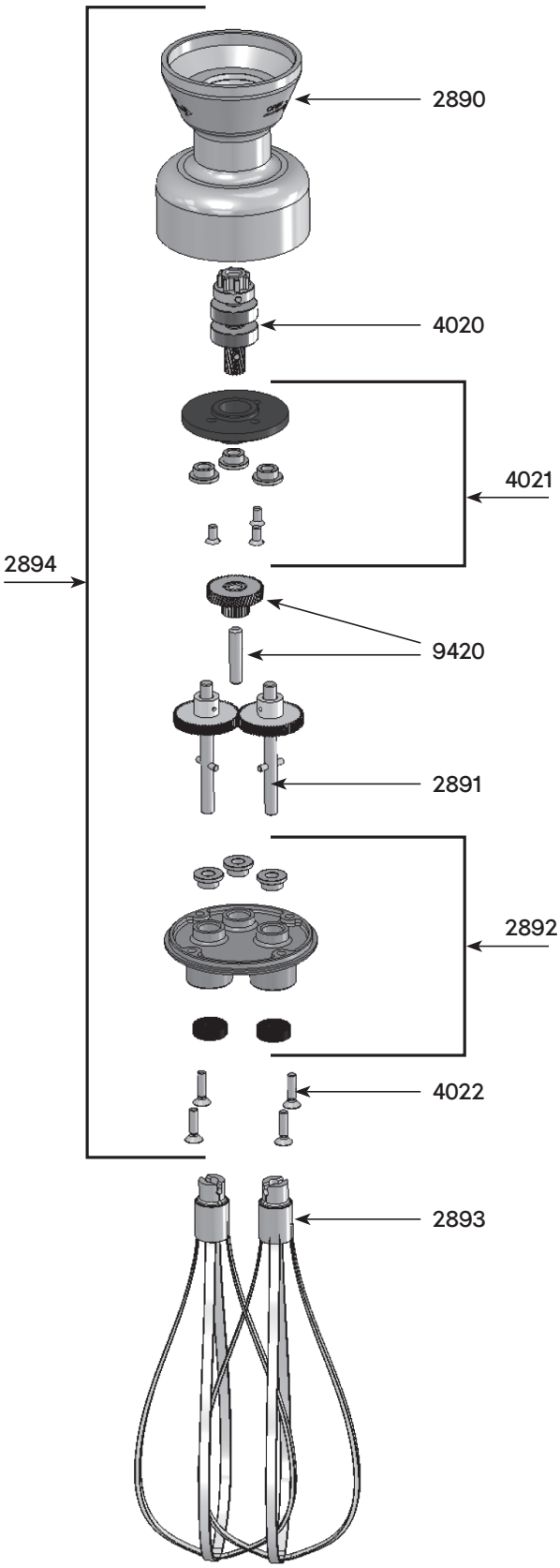

Whisk tool dismantling

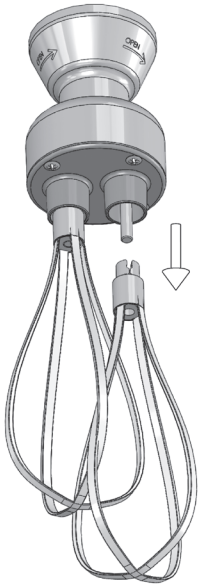

TECHNICAL SHEET

CUTTER BOWL DYNAMIX - Ref AC518

Parts list	Code
Base	1178.V
Equipped cover	2880
Blade	2881
Bowl	2882

Equipped lid 2880

O. ring	0658
O. ring (x4)	2871
Equipped upper shaft	2885
Handle screws (4)	2886
Reduction plate + ring	2887
Lid + reduction gear	2888

Blade 2881

A blade	08999904
B blade	08999905
Blade holder	1176
Equipped cone	2884
Set of screws (x3)	9502

Blade

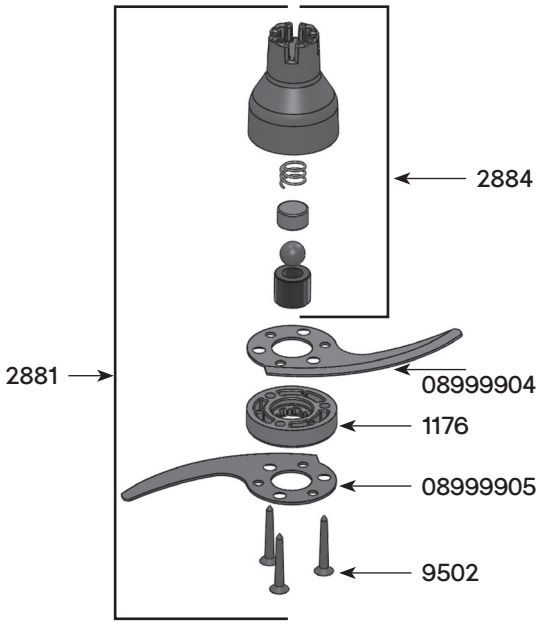

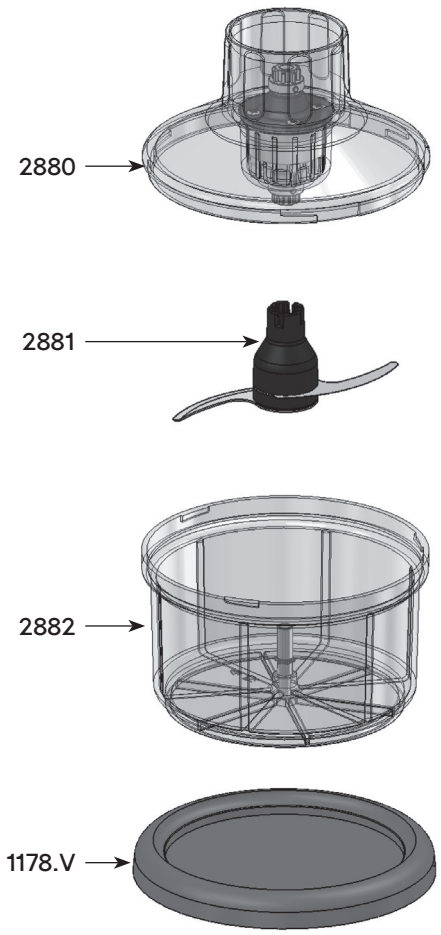
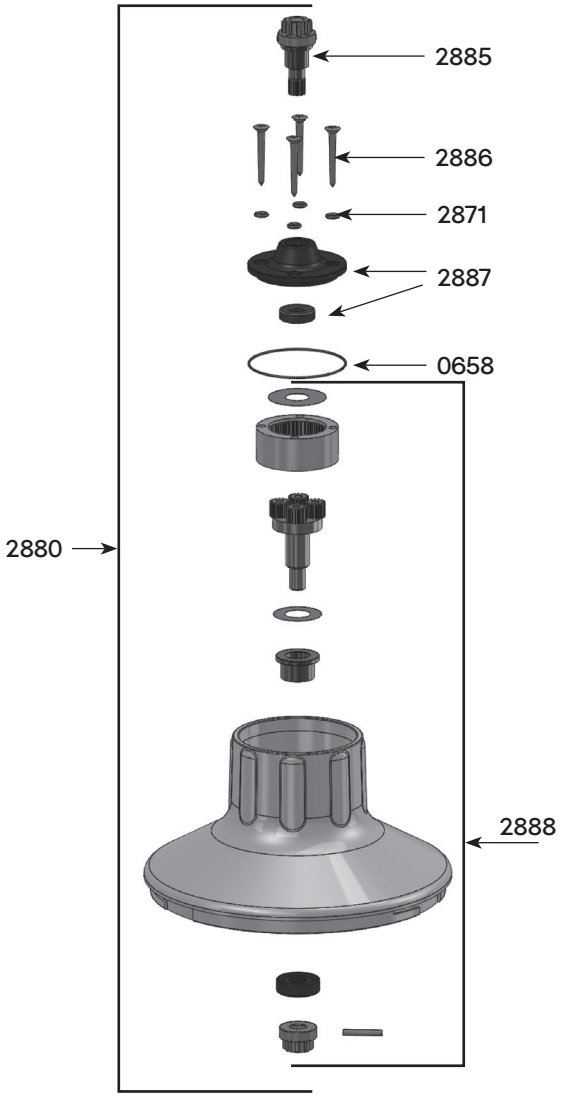
Equipped lid