ELECTRICAL VEGETABLE SLICER

WITH VARIABLE SPEED AND DIGITAL DISPLAY SCREEN

Ref. : CL150

- ✓ VEGETABLE SLICER 1100 W.
- ✓ VOLTAGE 220 - 240 V / SINGLE-PHASED.
- ✓ WITH DIGITAL DISPLAY SCREEN.
- ✓ VARIABLE SPEED FROM 320 RPM TO 720 RPM.
- ✓ 5 SPEED LEVELS.
- ✓ STAINLESS STEEL PUSHER HANDLE.
- ✓ DELIVERED WITHOUT DISC.

VARIABLE SPEED WITH DIGITAL DISPLAY SCREEN

ADVANTAGES

- **French design and manufacture, guaranteed quality, robustness and repairability - The DYNAMIC vegetable slicer is easily disassembled, repairable and reassembled. DYNAMIC guarantees the immediate availability of spare parts.**
- **Thanks to its unique design, this is an extremely versatile and aesthetic device. The design is based on users' real needs: the use of first quality materials (stainless steel), thought-out ergonomics, details and tips guaranteeing hygiene and safety (patent pending).**
- **Upgradeable device into combined vegetable slicer / food processor.**
- **A product designed with sustainable development in mind – 80% of the materials used are made from stainless steel and aluminium.**

DESCRIPTION

- Universal vegetable slicer with a large choice of stainless steel discs. All parts in contact with food are easily removable and dishwasher-proof for quick cleaning: cutting chamber, pusher, hopper and pusher handle. Thought-out ergonomics, the device is designed to be used by both left-and right-handed.
- Two hoppers to adapt to all types of vegetables: a wide hopper of 217 cm^2 for bulky vegetables such as cabbage, celeriac and a cylindrical hopper of Ø 60.5 mm for long and delicate vegetables (zucchinis, cucumbers). A side food chute with a 20 cm passage to install a deep GN collection container (20 cm).
- An induction motor, integrated in the metal motor block, with a power of 1100 W and a single-phased power supply of 220 - 240 V. Easy-to-use control panel.
- Magnetic detection which prevents the appliance from starting if an anomaly is detected. The appliance stops as soon as it detects any type of inappropriate use.
- Optional stainless steel discs, dishwasher-proof.

MAIN CHARACTERISTICS

- Capacity up to 300 kg/h, suitable for as much as 400 covers per service.
- Capable of grating, slicing, cutting fruits and vegetables.
- Ergonomic, ambidextrous, stainless steel pusher handle.
- All parts in contact with food are removable without tools and are dishwasher-proof.
- Easy-to-use waterproof control panel with on/off button, selected speed displayed, speed adjuster (5 speed levels). The digital display enables you to navigate on the screen and access the different operating modes: 1 fixed speed, 2 fixed speeds, variable speed. The "PULSE", "REVERSE", "TIMER" and "COUNTDOWN TIMER" functions are only available with the FOOD PROCESSOR mode.
- Very practical side disposal, without projection, enabling the use of deep collection containers.
- Automatic start with the pusher-handle.
- Automatic magnetic detection for total operator safety.
- Wide choice of stainless steel discs with a diameter of 225 mm (optional).

www.dynamicmixers.com

Dynamic - 518 rue Léo Baekeland BP57 - 85290 Mortagne sur Sèvre
Tel : +33 (0)2 51 63 02 72 • **E-mail :** export@dynamicmixers.com
Follow us on our social media accounts !

Made in France – Fabriqué en France

PATENTED SYSTEM

CE

CONSTRUCTION

- An induction motor, integrated in the motor block, ensuring robustness and reliability over time.
- Integrated air vents on the motor unit for good engine ventilation.
- Extremely solid base.
- POWER : 1100 W.
- VOLTAGE : 220 - 240 V / SINGLE-PHASE.
- 5 SPEEDS : from 320 Rpm to 720 Rpm.
- Easy and quick to dismantle accessories without tools (patent pending).

OPTIONAL ACCESSORIES VEGETABLE SLICER MODE

SLICING DISC

GRATING DISC

JULIENNE DISC

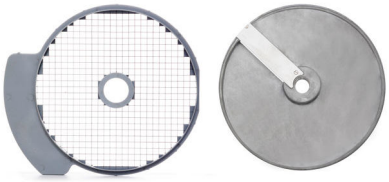

DICING KIT

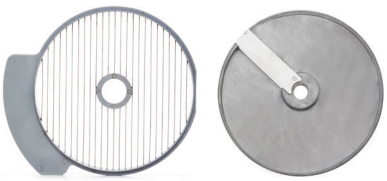

FRENCH FRIES KIT

- **CL1005** ❑ 0,5MM SLICING DISC
- **CL1015** ❑ 1,5MM SLICING DISC
- **CL1025** ❑ 2,5MM SLICING DISC
- **CL1030** ❑ 3MM SLICING DISC
- **CL1040** ❑ 4MM SLICING DISC
- **CL1050** ❑ 5MM SLICING DISC
- **CL1070** ❑ 7MM SLICING DISC
- **CL1080** ❑ 8MM SLICING DISC
- **CL1090** ❑ 9MM SLICING DISC
- **CL1110** ❑ 11MM SLICING DISC
- **CL1120** ❑ 12MM SLICING DISC
- **CL1130** ❑ 13MM SLICING DISC

- **CL2002** ❑ 2MM GRATING DISC
- **CL2003** ❑ 3MM GRATING DISC
- **CL2005** ❑ 5MM GRATING DISC
- **CL2009** ❑ 9MM GRATING DISC

- **CL3032** ❑ 3X2MM JULIENNE DISC
- **CL3042** ❑ 4X2MM JULIENNE DISC
- **CL3044** ❑ 4X4MM JULIENNE DISC
- **CL3055** ❑ 5X5MM JULIENNE DISC
- **CL3052** ❑ 5X2MM JULIENNE DISC
- **CL3088** ❑ 8X8MM JULIENNE DISC

- **CL4008** ❑ DICING KIT 8X8MM

- **CL5008** ❑ FRENCH FRIES KIT 8X8MM

OPTIONAL ACCESSORIES FOOD PROCESSOR MODE

- **CL8002 :**
  SERRATED BLADE
  FOOD PROCESSOR
  FOR GRINDING,
  FOR HERBS, SPICES,
  PASTRY...

- **CL9001 :**
  COMPLETE FOOD
  PROCESSOR KIT :
  BOWL, LID AND
  SMOOTH BLADE.

TECHNICAL SPECIFICATIONS

FRONT

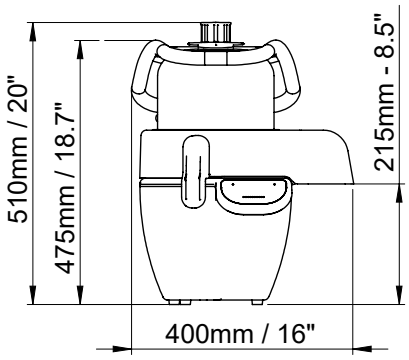

SIDE

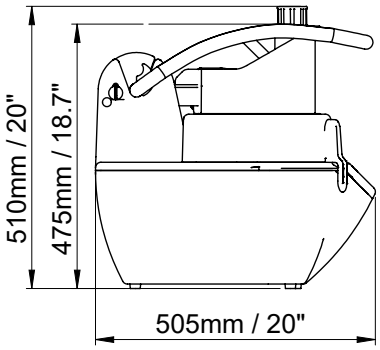

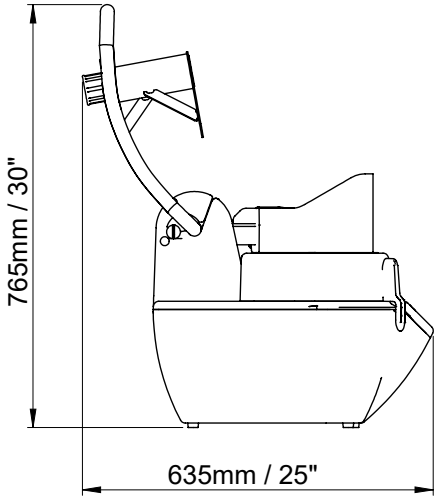

TOP

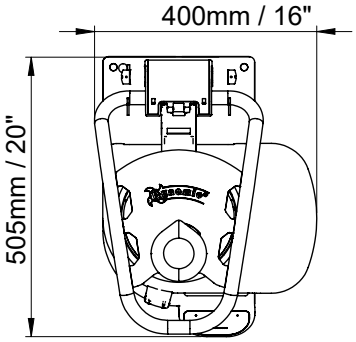

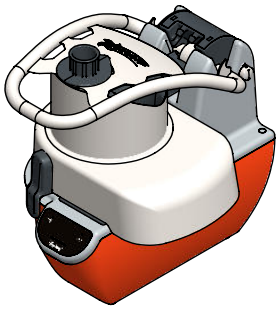

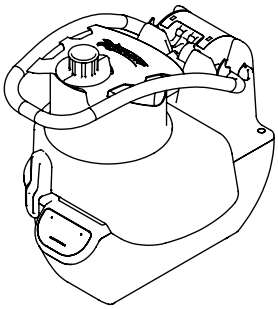

ELECTRICAL FEATURES	
VOLTAGE	220 - 240 V / 50 - 60 Hz
POWER	1100 W

GENERAL INFORMATION	
WIDTH	400 mm
HEIGHT	475 mm
DEPTH	505 mm